VOL. 16 NOTES FROM THE SHOP NO. 94

Woodsmith®

Build this
RAISED PANEL ENTRY DOOR
in your own shop

No. 94 August, 1994

Woodsmith®

Editor Donald B. Peschke
Executive Editor Douglas L. Hicks
Managing Editor Terry J. Strohman
Assistant Editors James M. Dolan, Jonathan Garbison, Mark A. Williams

Creative Director Ted Kralicek
Art Director Rod Stoakes
Senior Illustrators David Kreyling, Cinda Shambaugh
Illustrators Dirk Ver Steeg, Mark Higdon
Photographer Crayola England
Electronic Graphics Chris Glowacki
Design Director Ken Munkel
Senior Designers Jan Hale Svec, Kent Welsh
Shop Manager Steve Curtis
Shop Asst./Facilities Steve Johnson

Circulation Director Liz Bredeson
Subscription Manager Sandy Baum
Circulation Analyst Rod Cain
Newsstand Sales Kent A. Buckton

PUBLISHING SERVICES

Assoc. Editor: Gordon Gaippe • *Graphic Artist:* Cheryl L. Cynor

CORPORATE SERVICES

Controller: Robin Hutchinson • *Account.:* Laura Thomas • *Bookkeeping:* Julie Greenlee • *Production Mgr.:* Carol Quijano • *Info. Serv. Mgr.:* Joyce Moore • *Elec. Pub. Coord.:* Douglas M. Lidster • *Applic. Spec.:* Linda Morrow • *Sup. Asst:* Nick Thielen • *Admin. Assistants:* Cheryl A. Scott, Julia Fish • *Receptionist:* Jeanne Johnson • *Build. Maint.:* Ken Griffith

WOODSMITH MAIL ORDER

Marketing Dir.: Robert Murry • *Art Dir.:* Cindy Jackson • *Fulfillment Mgr.:* Valerie Wiese • *Catalog Prod. Mgr.:* Bob Baker • *Inv. Control/Prod. Mgr.:* Mark Mattiussi • *Proj. Supplies:* Linda Jones • *Tech. Support:* Jeff Janes • *Recept.:* Cynthia Kerman

CUSTOMER SERVICE

Supr.: Jennie Enos • *Cust. Serv. Reps.:* Jennifer Murphy, Joy Krause, Sara Kono, Anna Cox, Kristi Andrews, Lonnie Algreen, Karla Cronin

SHIPPING DEPARTMENT

Supr.: Nancy Johnson • *Fulfillment:* Gloria Sheehan, Donnie McVey, Chuck Carlson, Sylvia Carey

WOODSMITH STORE

Manager: Dave Larson • *Assistant Manager:* Paul Schneider • *Sales Staff:* Wendell Stone, Pat Lowery • *Office Manager:* Vicki Edwards

Woodsmith® (ISSN 0164-4114) is published bimonthly (Feb., Apr., June, Aug., Oct., Dec.) by Woodsmith Corp., 2200 Grand, Des Moines, IA 50312.
Woodsmith® is a registered trademark of Woodsmith Corp. Copyright© 1994 Woodsmith Corporation. All rights reserved.
Subscriptions: Single copy: $3.95. One year subscription (6 issues), $19.95. Two years (12 issues), $35.95. (Canada/Foreign add $5 per year, U.S. funds.)
Second Class Postage Paid at Des Moines, IA and at additional offices.
Postmaster: Send change of address to *Woodsmith*, Box 10718, Des Moines, IA 50350.
Subscription Questions? Call **1-800-333-5075**, 8:00 am to 5:00 pm, Central Time, weekdays.

EDITOR'S COLUMN

Sawdust

One of the things I enjoy about woodworking is being able to try something different. A new technique, a new tool, or a new project.

A good example of this is the feature project in this issue — the Entry Door, see photo below right.

ENTRY DOOR. I've been intrigued with the idea of building a raised panel entry door for some time. But I kept putting it off. I just wasn't sure it was the "right kind" of project for the magazine.

Well, I finally decided to go ahead and give it a try. I'm glad I did.

The Entry Door features basic mortise and tenon joinery and can be built with common woodworking tools. All you need is a table saw, router table, and a drill press. And a unique method for installing the raised panels makes assembly easy.

But as I said before, this isn't a typical woodworking project. For one thing, a door has to be made to fit an opening. And the size of the opening will vary from house to house. The other thing is, if you're going to build your own door you should be able to change the look of it to match your house.

So we took a slightly different approach in the way this article is presented. Beginning on page 23 we show the basic design considerations for building a door. Along with step-by-step instructions for the joinery and assembly.

The idea here is for you to take this information and use it to create a door that fits your needs. We've even included some different door designs to get you started.

One more thing. Since this is a different type of project for us, we'd like to hear what you think. Just jot your thoughts down and send them to: Woodsmith Publishing, Attn: Terry Strohman, 2200 Grand Ave., Des Moines, IA 50312.

LAWN SIGN. The idea for the Lawn Sign came up when I visited a friend. He had recently moved to a new house and invited me to stop by.

As I was driving down the street, I noticed several houses had small address signs in the front lawn. Unfortunately, my friend didn't have a sign in his lawn so it took me a while to find his house.

I suggested he get a lawn sign with his house number on it. In fact it would be easy to make your own.

He thought it was a great idea. But he said if *I* thought it was so easy why didn't *I* make one. I had nothing planned that weekend so decided to give it a try.

The sign had to be quick and easy to build (I only had two days). But I wanted to make it look as if the numbers had been carved by hand.

The end result is the Lawn Sign shown on page 16. The sign is built with common construction lumber and simple joinery. And to give it a hand-carved look I used a router and a core box bit.

CORNER CABINET. The idea for the Corner Cabinet, shown on page 6, also came up while visiting my friend's house. You see, his new house was actually an old house. The kind that has all sorts of built-in storage. But what I liked best was the built-in corner cabinet in one of the bedrooms. It seemed like the perfect storage solution — maximum storage in a minimum amount of space.

Our version isn't built in, but it does offer plenty of storage options for an unused corner of a bedroom.

CHANGES. Once again we've made some changes. Doug Hicks is now Executive Editor. Our new Managing Editor, Terry Strohman, isn't really new. He's been the managing editor of *ShopNotes*. Nancy Johnson is our Shipping Supervisor. Mark Mattiussi is our new Inventory Control Manager. And Pat Lowery has joined our store sales staff.

MISTAKE. It doesn't happen very often, but we do make mistakes. In the last issue there are some errors in the plans for the Garden Bench and the Wall Storage System. If you plan on building one of these projects please call us at 1-800-444-7527. We'll send a correction sheet right away.

Don

A LOOK INSIDE

Contents

FEATURES

Corner Cabinet 6

This project is a closet, a dresser, and a bookshelf all in one. But best of all, it provides useful storage for the least-used place in a room — a corner.

Lawn Sign 16

This classic-looking Sign makes an attractive and practical addition to any lawn. And it can be built in just a weekend.

Routing Signs 19

Create the look of a hand-carved sign with a core box bit and a router. A few tips and the right technique make it easy.

Edging Plywood 20

We show three different methods for using hardwood to cover the edges of plywood. Plus tips on gluing, clamping, and trimming the edges flush.

Entry Door 23

No tricky joints, no special tools. This Door is built with basic mortise and tenon joinery. And a unique design for the raised panels makes them easy to build and install.

Reader's Jig 30

In this issue we feature a unique design for a flush-trim jig. It mounts to a router for trimming edging on plywood.

DEPARTMENTS

Tips & Techniques 4
Shop Notes 14
Talking Shop 22
Sources 31

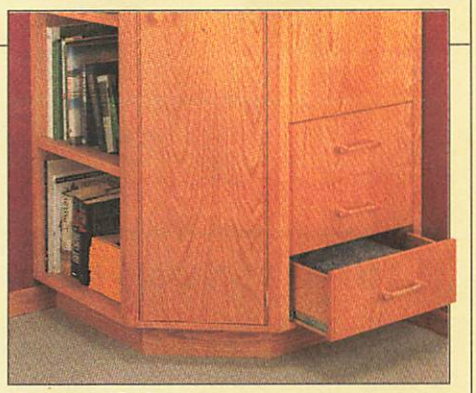

Corner Cabinet *page 6*

Lawn Sign *page 16*

Routing Signs *page 19*

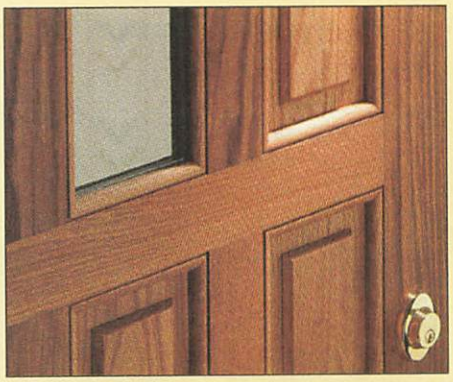

Entry Door *page 23*

Tips & Techniques

ROUND TENONS ON SQUARE STOCK

■ When a spindle broke on one of my dining room chairs, I had to come up with a way to cut a round tenon on a square workpiece. To do that, I made this simple U-shaped jig that attaches to the miter gauge on my router table, refer to Fig. 2.

The jig has a back and two support blocks, see Fig. 1. The support blocks have large holes that suspend the workpiece over a straight bit.

These holes don't have to fit the workpiece exactly. The jig still works if they're slightly oversize. (about 1/32")

To set up the jig, install the spindle in the support blocks, see Fig. 2. With the router bit lowered, center the spindle over the bit. Put two stop blocks in the miter slot to keep the miter gauge from moving. Next, to establish the length of the tenon, position the fence (or clamp a stop block) behind the bit.

To use the jig, raise the bit and make several light cuts to form the tenon. Slowly turn the workpiece counterclockwise into the bit for best results, see Fig. 2.

Repeat the process until the tenon is complete.

Robert C. Noelle
Middletown, New York

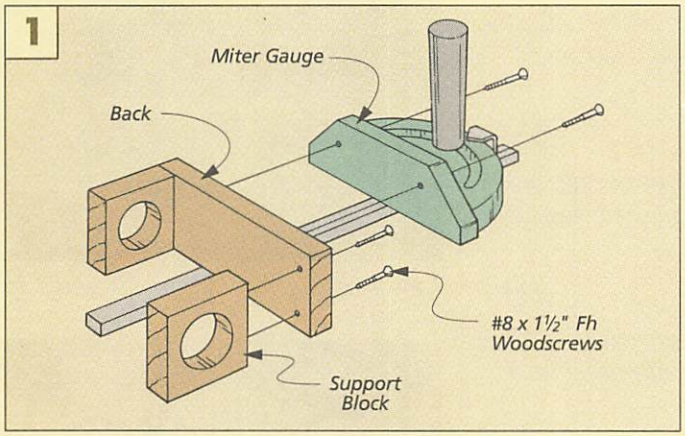

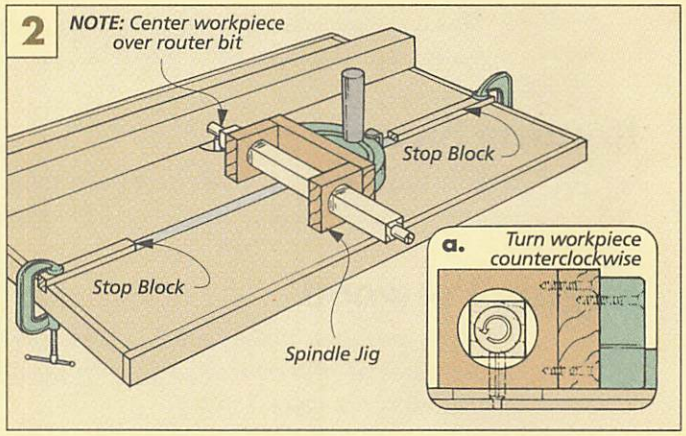

CHECKING MITERS

■ The normal way for checking a mitered corner for square is to butt the miters together and place a try square on the outside of the corner. I don't. Mainly because I find it difficult to hold the square with one hand while keeping the mitered workpieces tight in the other.

For me, it's easiest to hold the workpieces together edge-to-edge and place the square in the mitered corner, see drawing.

This also allows me to place the mitered pieces over the edge of my bench so I can get a more accurate reading when checking thinner stock.

Bob Bryce
Fairport, New York

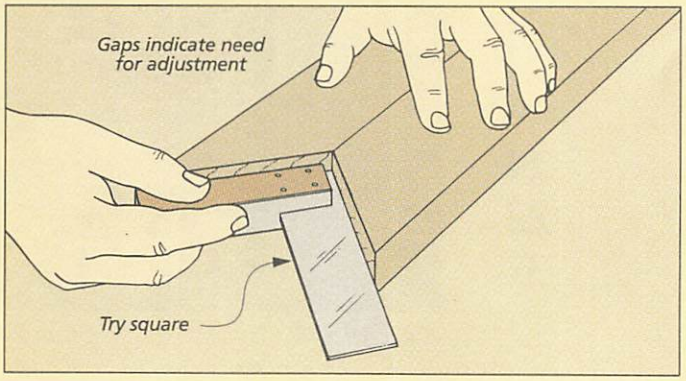

CLEAN YOUR SANDER

■ To remove pitch buildup from sanding belts, I use a gum eraser. But occasionally, the eraser won't remove all of the pitch. So to complete the job, I use a card file, see drawing.

The metal bristles on a card file are stiff enough to get at the toughest buildup. But it won't damage the belt.

To clean a sanding belt with a card file, gently rub the file back and forth over the belt. Then rotate the belt by hand to expose additional buildup.

John Lucas
Gainesboro, Tennessee

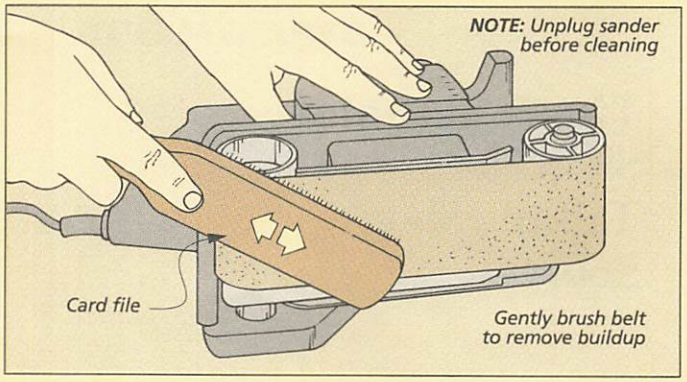

SANDER DUST COLLECTOR

■ When I use my bench sander it creates a lot of sawdust in a hurry. Dust covers everything after just a few minutes. A dust collector would be nice. But I don't have enough space or money for one.

So I use my shop vacuum for a dust collector. I turn the utility nozzle upside down and attach it to the base of the sander. A "bungee cord" holds everything in place, see drawing below.

The vacuum gets most of the dust as it comes off the belt. And the bungee cord makes it easy to remove the nozzle for other jobs. Plus the price was right — I already had the vacuum and the bungee cord.

Ted Warner
Merrett Island, Florida

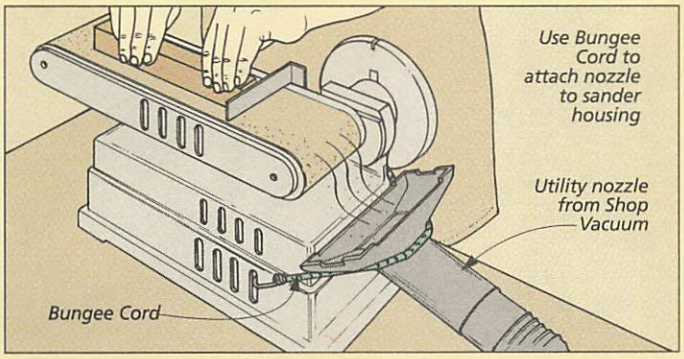

CHEAP BRUSHES

■ I do a lot of finishing. And I used to go through quite a few foam brushes. But I found that even though a single foam brush is inexpensive, you rarely need just one — and they do add up. To cut down on the cost of finishing my projects, I've started using short lengths of paint rollers instead.

I buy medium-nap rollers in value packs of five from my local hardware store. Then I cut them into 2" lengths using the band saw, see drawing.

Each of my "roller brushes" holds stain and finish well, because of the thick nap on the roller. And there's minimal dripping. They last longer and apply a more uniform coat of stain than a foam brush. And best of all, they cost about half as much.

Greg Forster
Waterloo, Iowa

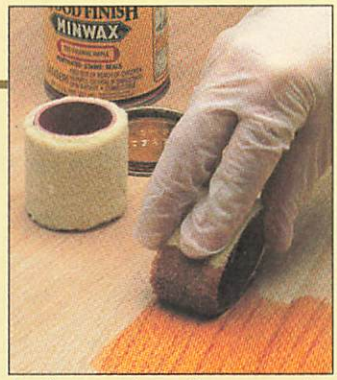

▲ *Cut sections from a paint roller to use like a brush for applying paint or stains.*

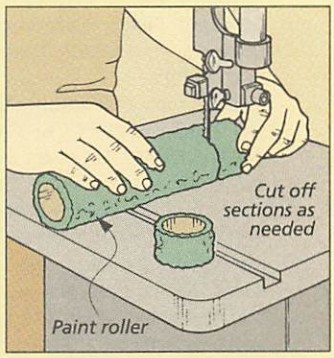

EDGE TRIMMER

■ I built the mortising table from *Woodsmith* No. 67. It's a good tool for cutting mortises quickly and accurately. But with a simple modification, it will also trim edging flush on plywood.

First, insert a flush trim bit in the router. Then, to allow clearance for the over-size edging strip, raise the bed of the table with a piece of ¾"-thick plywood, see drawing.

Once the plywood is carpet taped to the table, raise or lower the bit so the bearing is flush with the plywood, see detail. Then rout the edging flush, see drawing below.

Bruce Wrenn
Apex, North Carolina

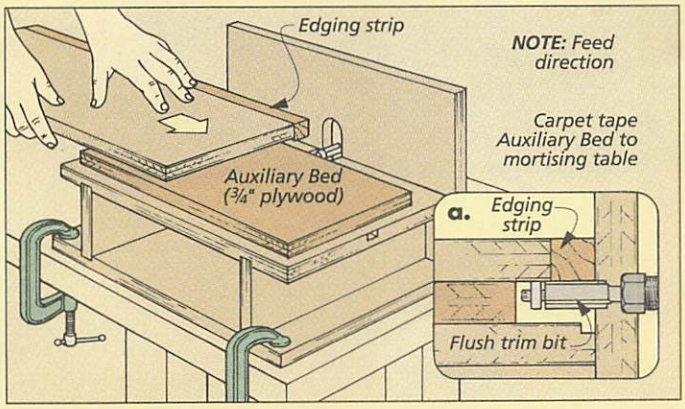

QUICK TIPS

IMPROVED TRACKING

■ If you're having trouble with the tracking on your belt sander, try cleaning the drive drum on the sander. You'd be surprised at how much sawdust and pitch can accumulate on the drum. And you might be equally surprised how much better it will track once it's cleaned.

Ron West
Columbus, Ohio

PANTY HOSE FILTER

■ The filter on my shop vacuum seems like it's always clogged up with sawdust. So to help keep the filter from clogging quickly and to make it easier to clean, I slip two pair of old panty hose over the filter.

To do this, first cut and discard the lower leg portions from each panty hose (just below the crotch). Then tie a knot at each leg opening and stretch the waistband over the filter. A large rubber band stretched over the filter keeps both pair of panty hose from slipping off.

Albert Sandoval
Havelock, North Carolina

SUBMIT YOUR TIPS

If you would like to share an *original* shop-tested tip, send it to *Woodsmith*, Tips and Techniques, 2200 Grand Avenue, Des Moines, Iowa 50312. Or if it's easier for you, FAX it to us at: 515–282–6741.

If we publish it, we will send you $30 to $150, depending on the published length. Include a brief explanation and sketch (or photo). And don't worry, we'll rewrite the tip and redraw the art if necessary. Also, *please* include a daytime phone number.

Corner Cabinet

Shelves, closets and drawers. This project combines all three to add a maximum amount of storage in a minimum amount of space.

After you've lived in a house long enough, you begin to experience the same problem — storage space. There never seems to be enough. So to help solve that problem, I decided to build a cabinet. But not just any cabinet. I wanted one that would take up very little floor space. And still provide a lot of room for storage.

This Corner Cabinet is the result. It's a straightforward project to build — just two plywood cases with shelves, doors, and drawers. And mostly basic joinery (rabbets and dadoes).

Both cases are connected to make a cabinet that fits perfectly in the corner of a room.

PRACTICAL. Although the Cabinet is pretty basic, there are a couple things that make it unique. First, it's designed to be disassembled. So after it's been completed in the shop, it can be taken apart and easily moved to a room where it's needed.

Then later, when the Cabinet is needed somewhere else (like a dorm room or apartment,) it can be taken apart again. And this time set back up differently — with the bookshelf and closet cases reversed.

VERSATILE. Another thing I like about this project is the versatility. Depending on your storage needs, you can "customize" the insides of the cabinet any way you want.

FINISH. Just to experiment, we built two Corner Cabinets and finished each differently. One version received a traditional treatment of wiping varnish, see the main photo. But for a completely different look, the second Cabinet was finished with pastel stains. For more on this, see page 13.

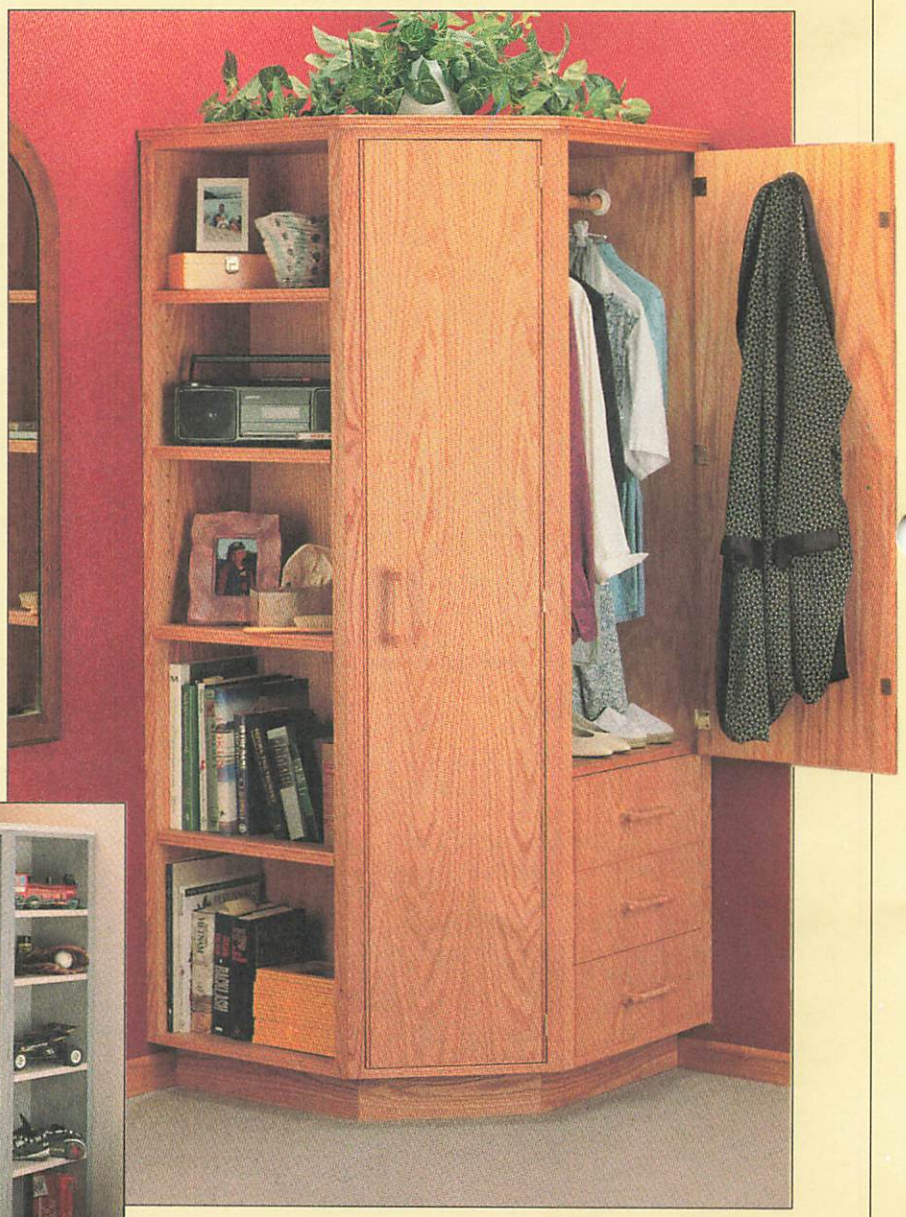

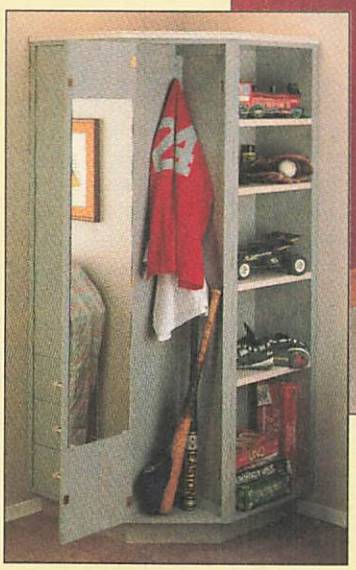

EXPLODED VIEW

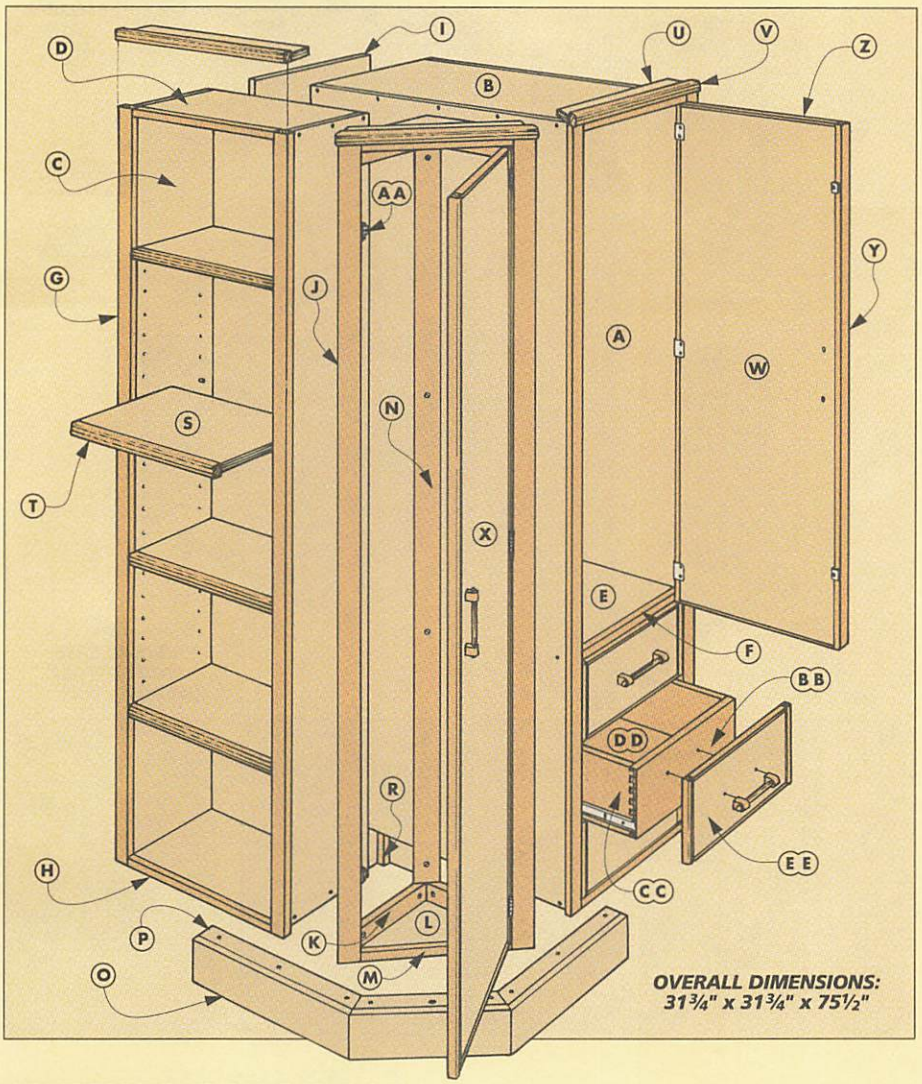

MATERIALS

A	Closet Case Sides (2)	¾ ply - 30¾ x 70½
B	Closet Case Top/Btm. (2)	¾ ply - 30¾ x 18½
C	Shelf Case Sides (2)	¾ ply - 11¼ x 70½
D	Shelf Case Top/Btm. (2)	¾ ply - 11¼ x 18½
E	Closet Divider (1)	¾ ply - 29¼ x 18½
F	Divider Edging (1)	¾ x ¾ - 18½
G	Vertical Edging (4)	¾ x 1¼ - 70½
H	Horizontal Edging (4)	¾ x ¾ - 18
I	Case Backs (2)	¾ ply - 18½ x 69½
J	Beveled Edging (2)	¾ x 1¼ - 70½
K	Platform Cleats (4)	¾ x 1½ - 12 (rgh)
L	Platforms (2)	¾ ply - 8 x 16 (rgh)
M	Platform Edging (2)	¾ x ¾ - 14 (rgh)
N	Inside Trim Strip (1)	¾ x 2 - 66
O	Kickboard Facing (1)	¾ ply - 4 x 72 (rgh)
P	Kickboard Cleats (4)	¾ ply - 2 x 20 (rgh)
Q	Ft. Glue Blocks (2)	¾ x 2 - 3¼
R	Bk. Glue Block (1)	¾ x ¾ - 3¼
S	Shelves (4)	¾ ply - 10½ x 17 15/16
T	Shelf Edging (4)	¾ x 1 - 17 15/16
U	Backing Cleats (3)	¾ ply - 2 x 24 (rgh)
V	Top Molding (3)	¾ x 1 - 24 (rgh)
W	Closet Door (1)	¾ ply - 17⅛ x 47⅝
X	Center Door (1)	¾ ply - 12⅞ x 68⅝
Y	Door Sides Edging (4)	⅜ x ¾ - 72 (rgh)
Z	Door Top/Btm. Edging (2)	⅛ x ¾ - 96 (rgh)
AA	Door Stops (2)	¾ x 1½ - 2
BB	Drawer Front/Backs (6)	½ x 6⅛ - 17
CC	Drawer Sides (6)	½ x 6⅛ - 24
DD	Drawer Bottoms (3)	¼ - 16½ x 23½
EE	False Fronts (3)	¾ ply - 17⅛ x 6 11/16

SUPPLIES

- (6) #8 x 2¼" Fh Woodscrews
- (111) #8 x 2" Fh Woodscrews
- (8) #8 x 1¾" Fh Woodscrews
- (14) #8 x 1½" Fh Woodscrews
- (38) #8 x 1¼" Fh Woodscrews
- (8) #8 x 1" Fh Woodscrews
- (3 pr.) 1½" Wraparound Hinges
- (3 pr.) 24" Full-Extension Drawer Slides
- (4) Magnetic Catches
- (1) Adjustable Leg Leveler
- (1 set) Closet Pole Sockets
- (1) 1¼"-dia. Red Oak Dowel (18")
- (1) ¼"-dia. Red Oak Dowel (18")
- (1) ½"-dia. Red Oak Dowel (36")

CUTTING DIAGRAM

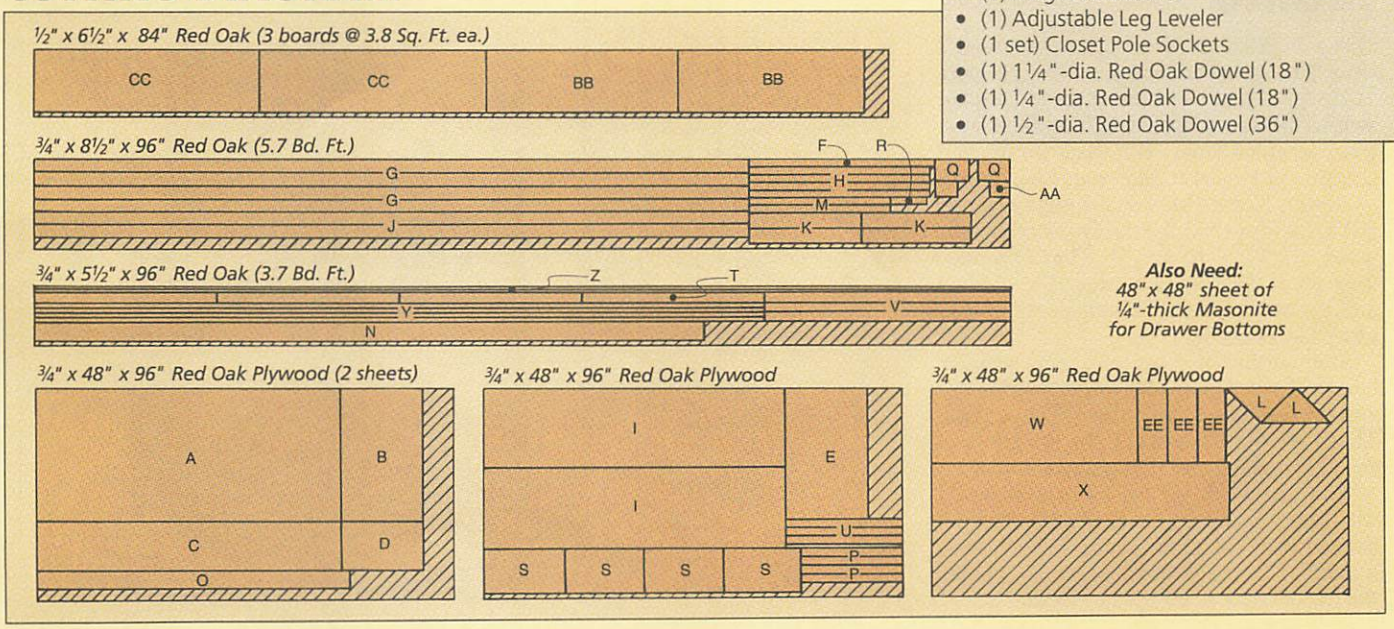

Also Need:
48" x 48" sheet of ¼"-thick Masonite for Drawer Bottoms

CASES

At the heart of this project are two large plywood cases. One case forms a closet compartment, the other becomes a shelf compartment.

To make the cases, I started by cutting the **sides (A)** and **top/bottom (B)** for the closet compartment.

Then I cut the **sides (C)** and **top/bottom (D)** for the shelf compartment.

RABBETS. The primary joinery on both boxes consists of a rabbet along three edges of each piece. This is for joining the top and bottom to the sides and also for accepting the plywood backs (added later).

First, I used a dado blade in the table saw to cut a rabbet on the back, top, and bottom edges of each compartment side, see Detail a at right. And also a rabbet along the back edge of the compartment top and bottom.

Note: Cut the rabbets ¼" deep, and wide enough to fit the ¾" plywood pieces.

DADO. After cutting the rabbets for the compartment backs, I set aside the parts for the shelf compartment. Then set up and cut a ¼"-deep dado across the inside face of the closet compartment sides, see Detail b. These are for a plywood divider.

DIVIDER. Now the shelf compartment can be glued and screwed together. But before assembling the closet compartment, the **closet divider (E)** must first be cut to fit between the dadoes.

Note: The divider is cut to width so it's flush with the inside edge of the rabbets along the *back* edge of the closet sides, see Detail b. And inset ¾" from the *front* edge of the sides, see Detail c.

With the divider in place in the dadoes, the closet compartment can be glued and screwed together, see drawing above.

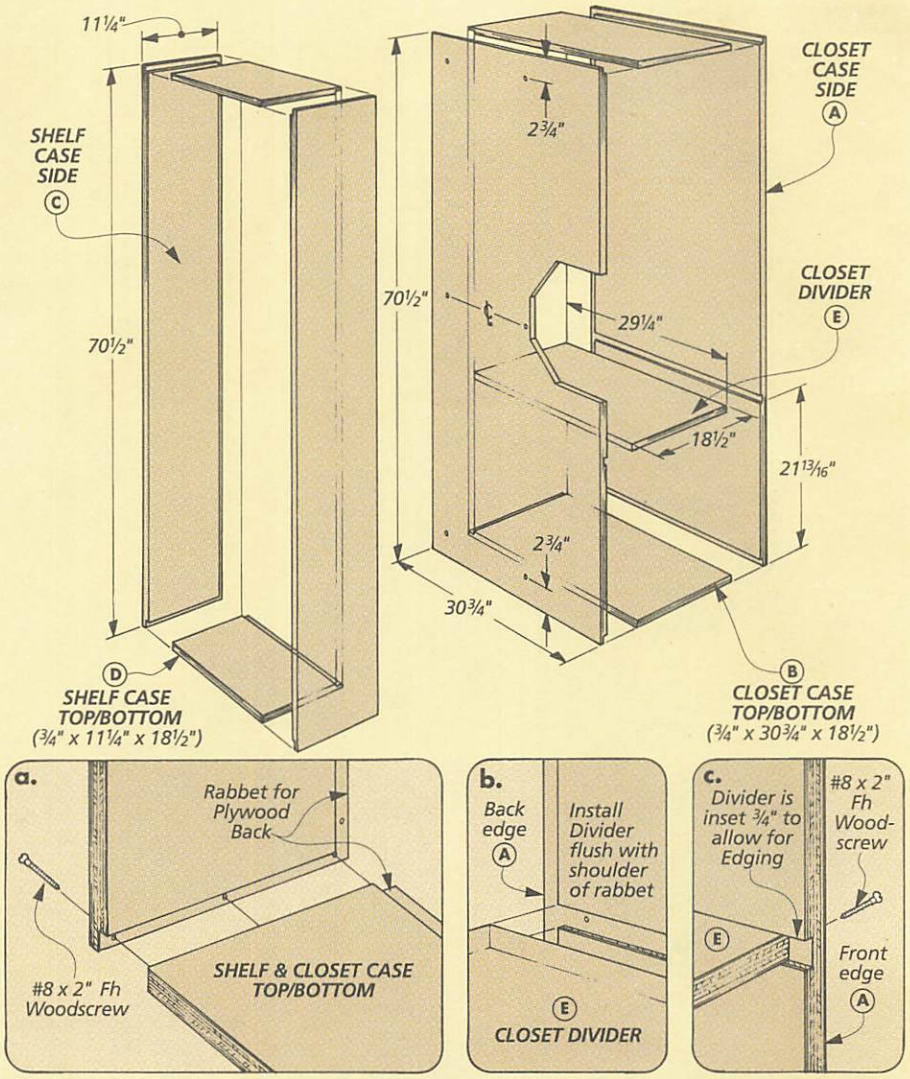

EDGING

When building projects from plywood, I usually try to hide the edges of the plywood. To do this, I used several hardwood edging strips. All these strips (**F**, **G**, and **H**) are cut from ¾"-thick stock. But their widths and lengths vary, refer to Materials List, page 7.

Design Note: The vertical edging strips (G) are wider than the thickness of the plywood, see Figs. 1b and 1c. That's because they act as filler strips between the Cabinet and the walls when the entire assembly is placed in a corner.

After cutting the vertical edging strips to length, I cut the divider edging strips (F) and horizontal edging strips (H) to length. These are ripped to match the thickness of the plywood top and bottom pieces.

Now, all the edging strips can be attached with glue and clamps. Assembly Note: I started with the strip for the divider, then moved on to the vertical strips, and finally the horizontals, see Figs. 1a, 1b, and 1c.

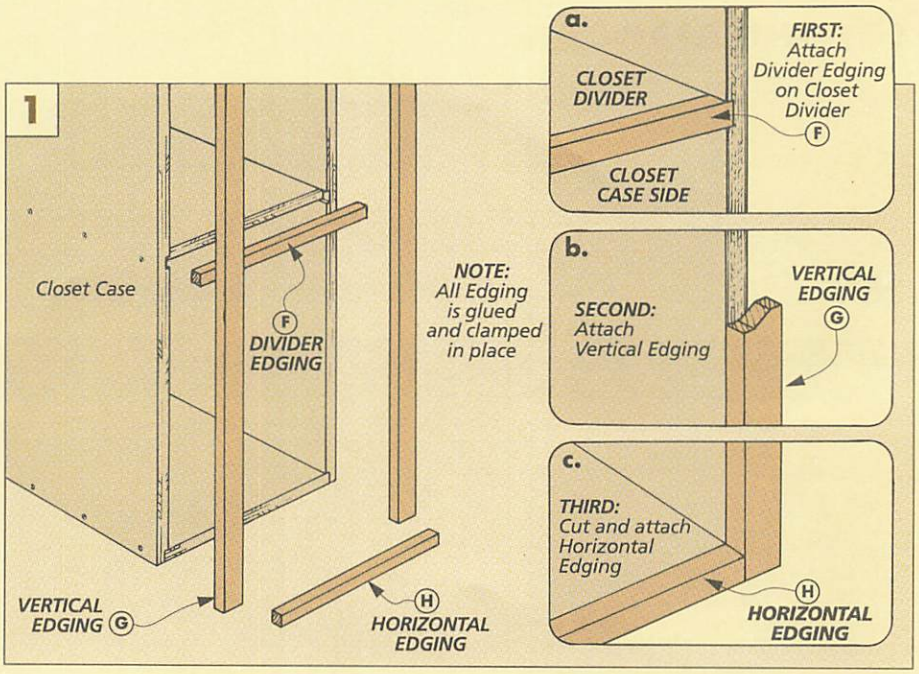

BACK

The next thing to do is to cut two plywood **case backs (I)** to fit into the rabbets cut earlier, see Fig. 2. After the backs are cut, they can be installed in the cabinets, see Fig. 2a.

Before screwing the two assemblies together, first decide on which side of the closet you prefer to attach the shelf compartment, see Options box at right.

Note the location of the screws that are installed from *inside* the closet compartment, see Options box and drawing at left.

After that, when the two boxes (the shelf compartment and the closet compartment) are screwed together, the whole thing begins to look like a cabinet.

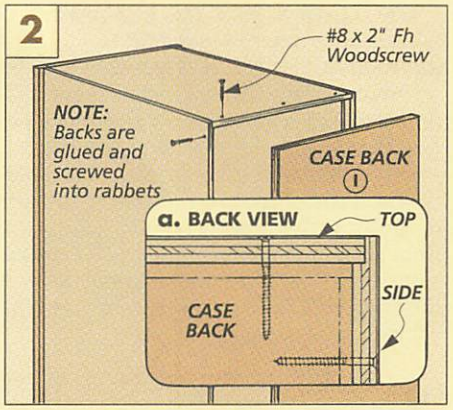

OPTIONS

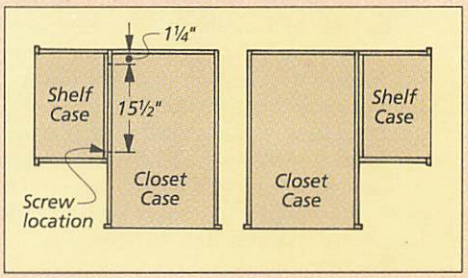

▲ *With this Corner Cabinet, the shelf case can be connected to either side of the closet case. It takes three pair of #8 x 1¼" Fh woodscrews installed from inside the closet.*

CENTER COMPARTMENT

Here's the most interesting (and unique) part of the whole project. It's building the center compartment that "bridges" the fronts of the closet and shelf cases.

This center compartment is added for two reasons. First, it visually ties together the two plywood cases. And second, it creates another storage compartment.

BEVELED EDGING STRIPS. I started the center unit by ripping a pair of **beveled edging strips (J)**, see Fig. 4. These attach to the vertical edging strips on either side of the triangular opening, refer to Figs. 3 and 5. Their purpose is to frame in the opening and provide a surface for hanging a door.

The edging strips are cut in a two-step process to form a notch, see Fig. 4. This notch "hooks" onto the vertical edging strips, see Fig. 3.

Now, the edging strips can be screwed in place (seven screws in each), see Fig. 3a.

Note: I didn't glue on the strips in case I decided later to reverse the closet and shelf cases, refer to Options, above.

TOP & BOTTOM CLEATS. The second part of the center unit are two pair of **cleats (K)**, see Fig. 5. And, like the beveled edging strips, these cleats are cut to fit the triangular opening (but with a simpler cut).

TOP & BOTTOM PLATFORMS. After cutting four cleats to fit inside the triangular opening, the next thing to do is cut two **platforms (L)** to rest on the cleats, see Fig. 6.

EDGING STRIPS. After the platforms are screwed in place, cut and attach a pair of **platform edging strips (M)**, see Fig. 7.

INSIDE TRIM STRIP. The last thing to do is to cut and install a long beveled **trim strip (N)** over the inside corner of the center compartment, see Fig. 8.

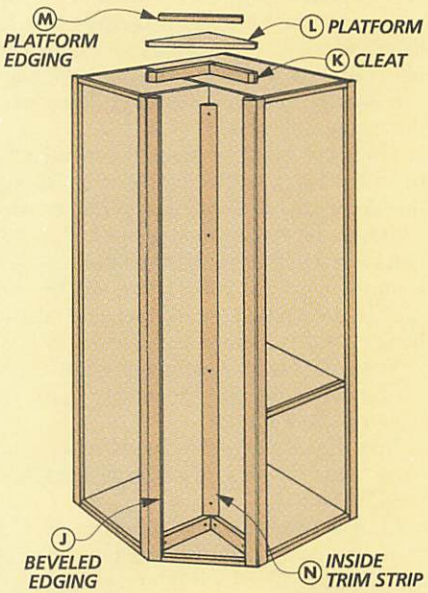

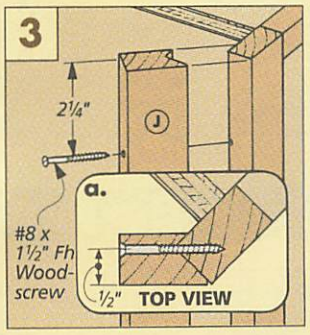

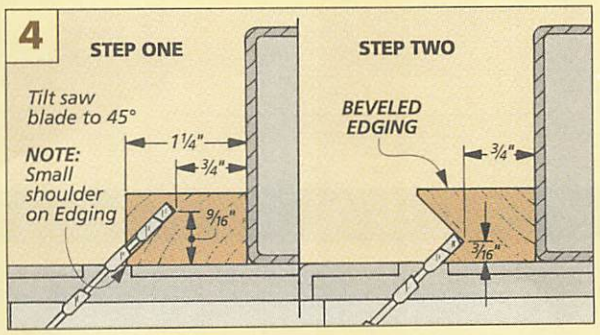

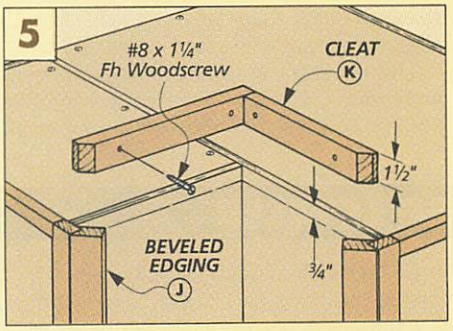

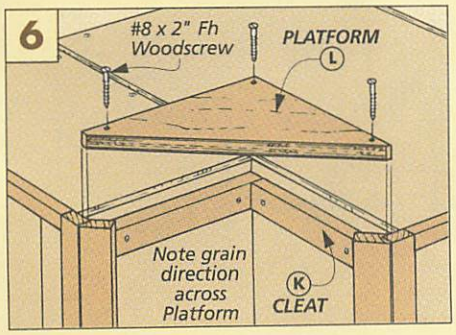

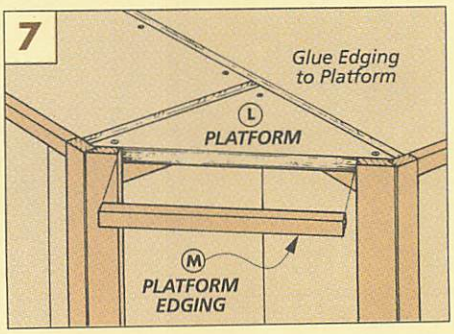

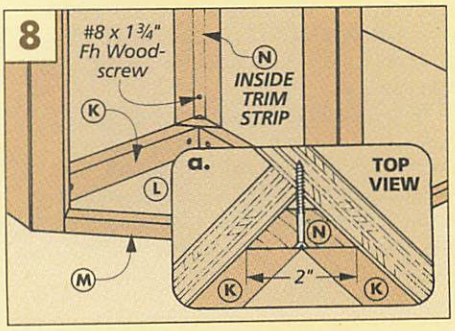

BASE

After completing the center unit, I moved on to the base of the cabinet. The base serves two purposes: First, it elevates the cabinet off the floor so you don't stub your toe every time you walk up to the cabinet. (That's why a cabinet base is often called a "kickboard.")

The kickboard base also gives the cabinet a neater appearance. When it's lifted off the floor, the cabinet assembly will clear the baseboard that runs into the corner.

The base consists of two assemblies that are attached separately to the bottom of the cabinet, see Fig. 9 and drawing at right. Both are "L"-shaped assemblies, with a plywood facing strip attached to a cleat, see Fig. 9a.

PLYWOOD FACINGS. I started the base by first ripping a length of plywood to serve as a blank for the **kickboard facings (O)**. Rip this to width so when it's attached, the cabinet will clear the height of the baseboard, see Fig. 9a. (For my 3½"-high baseboard, the facing is 4" wide.)

Then, cut a groove along the inside edge to accept a kickboard cleat, see Fig. 9a. Now the blank can be cut into five oversize strips.

CLEAT. To secure the facings to the cabinet, I next cut four **kickboard cleats (P)** to a rough length of 20". (Three will be used around the front of the cabinet, and one will be use for the back corner, see Fig. 9.)

Then, cut a rabbet along one edge to form a tongue that fits into the groove in the facing strips, see Fig. 9a.

Now the cleats can be glued to the facings to form the "L"-shaped kickboard brackets, see Fig. 9a.

GLUE BLOCKS. Before mitering and attaching the brackets to the cabinet, I first cut a pair of **glue blocks (Q)** for the front of the kickboard assembly, see Fig. 10. These add strength to the miter joints and also help to align the pieces when they're installed.

There's also a small **glue block (R)** used to reinforce the kickboard assembly that goes on the back of the cabinet, see Fig. 11.

INSTALLATION. Now the kickboard sections can be mitered to length to fit under the cabinet, see Fig. 9. Then they can be screwed in place. Note: I installed one section at a time. Then added a glue block before installing the next section, see Fig. 10.

LEG LEVELER. If a leg leveler is needed, now is the best time to install one. It's a piece of hardware that attaches to the inside of the front section of kickboard. Our leveler has a threaded "leg" that screws up and down in the bracket to raise or lower the front of the cabinet, see box below.

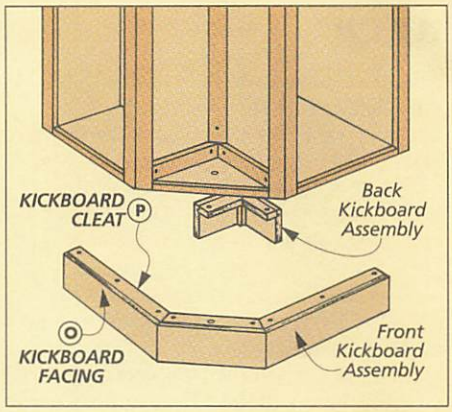

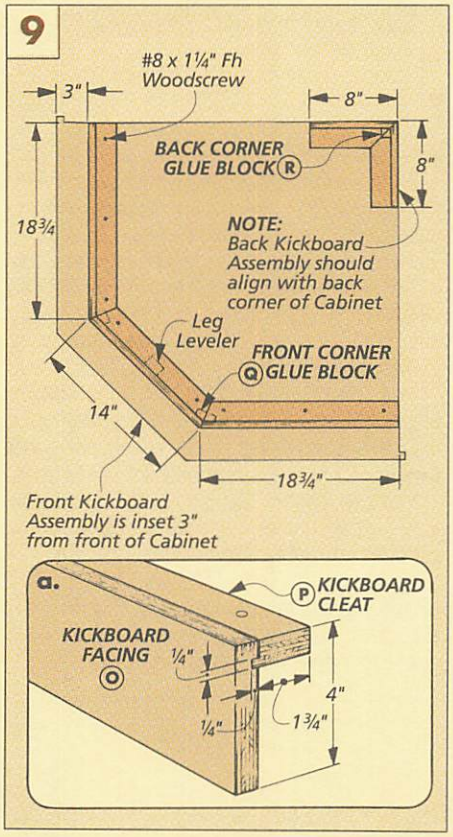

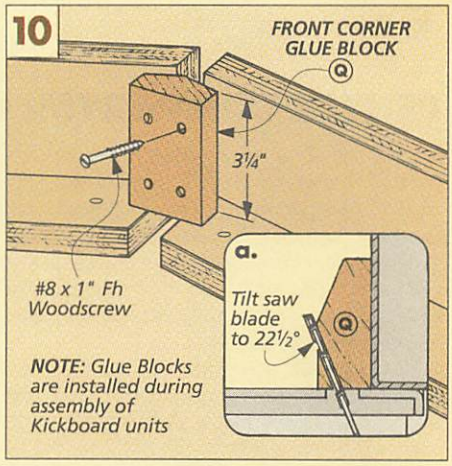

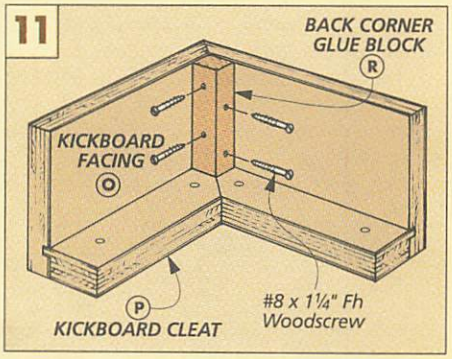

LEG LEVELER

The Corner Cabinet can be placed in any right-angle corner. But if the floor is carpeted, there can be a problem. Actually, the problem isn't the carpet but the tacking strips along the wall *under* the carpet. These will tend to tip the Cabinet forward, away from the wall.

The best way to tip the Cabinet back into the corner is to raise the front. A leg leveler is what I used. ((See page 31 for sources.)

The bracket for the leveler is installed on the back side of the front kickboard facing strip, see drawing. Then, a hole through the platform allows the lever to be adjusted.

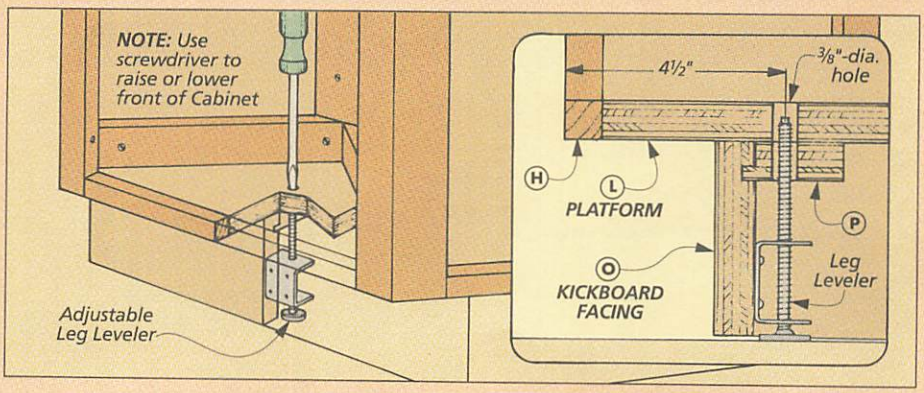

SHELVES & MOLDING

After the cabinet base was installed, I started on the shelf system. But instead of buying shelf support pins, I used removable dowel pins to support the shelves.

PIN HOLES. The first thing to do is drill a series of holes for the ¼"-dia. shelf support pins, see Fig. 12 and the drawing at right.

Shop Note: To make aligning these holes easier and more accurate, I used a long strip of pegboard as a guide while marking and drilling the holes.

For the most adjustability, there are 23 pairs of holes spaced 2" apart on either side of the shelf compartment, see Fig. 12.

SHELVES. After the holes have been drilled, I made four adjustable **shelves (S)**. (You can make any number.) When cutting the shelves to length, cut them 1/16" *shorter* than the width of the opening, see Fig. 13.

As far as the width (depth) of the shelves, cut them so that when they're installed they fit flush to the front edge of the cabinet *after* a ¾"-thick edging strip has been attached to the front, see Fig. 13 and drawing at right.

After cutting the shelves to size, I cut a groove along the sides of each shelf to accommodate the shelf pins, see Fig. 13a.

SHELF EDGING. Next, I cut an **edging strip (T)** to fit on the front edge of each shelf, see Fig. 13. Note: The edging strips are ¾" thick and 1" wide.

Then, rout a decorative profile on the front of each edging strip, see Fig. 14. (See page 31 for sources of a corner beading bit.)

Now the edging strips can be glued to the front of each shelf. Then, before installing the shelves, cut four ¾"-long dowel pins to support each shelf.

TOP MOLDING. To finish off the cabinet, I added molding around the top. Like the front kickboard assembly, the molding on top consists of three sections. Each has a **backing cleat (U)** and a **top molding strip (V)**, see Figs. 15 and 15a. The backing cleats are 2"-wide plywood pieces cut 24" long.

The molding strips are made just like the shelf edging (T) cut earlier. The only difference is their lengths. (I cut each of the molding pieces to a rough length of 24".)

Next, rout the front face of each strip to match the profile of the shelf edging, see Figs. 14a and 15a.

Now the edging strips can be glued to the backing cleats. Then each oversize piece can be mitered to fit around the top of the cabinet and screwed in place, see Fig. 16.

Design Note: When attaching the molding, it should overhang the front of the cabinet by ¼", see Fig. 15a. Also, the outside ends of the molding should align with the outside edge of each vertical edging strip.

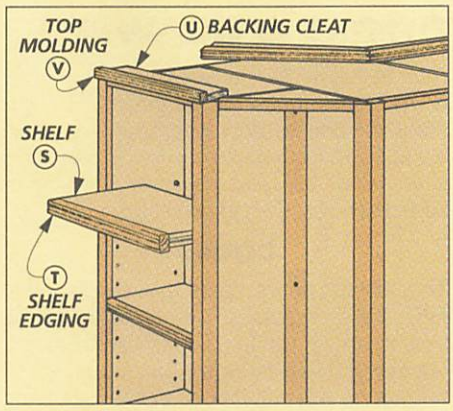

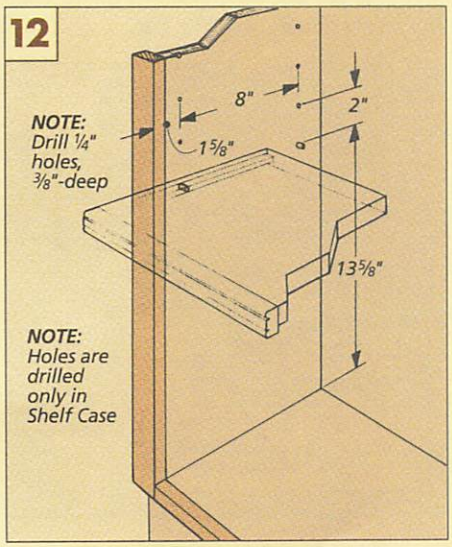

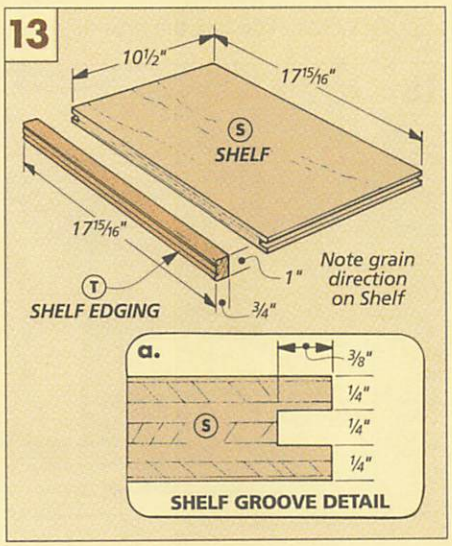

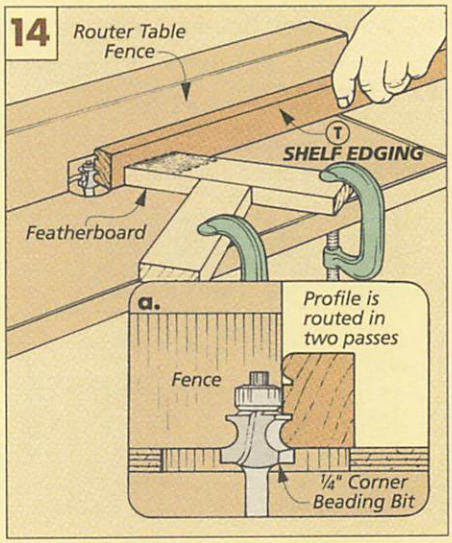

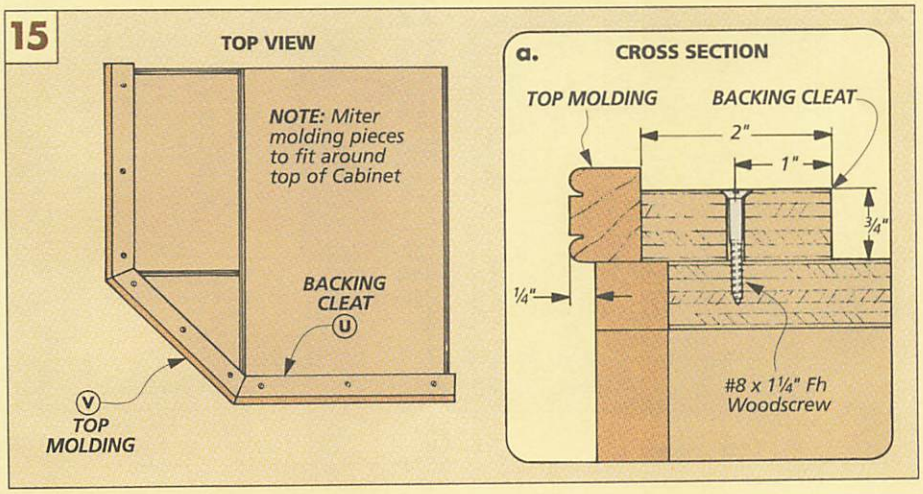

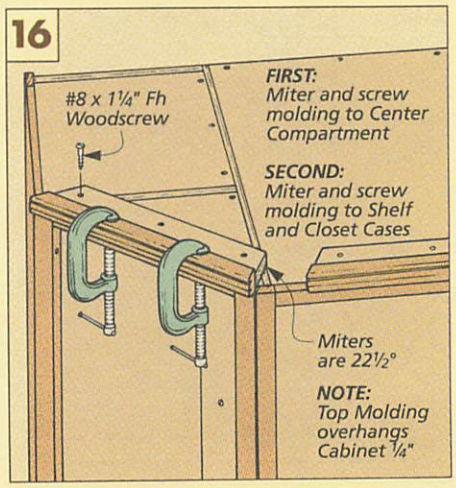

DOORS & DRAWERS

After installing the shelves I moved on to the doors. There's one for the closet compartment and one for the center unit, see drawing at right. Both doors can be cut from one sheet of ¾" plywood. Hardwood edging is added to cover the exposed plies.

DOORS

To make the doors, the first step is to determine the size of the plywood pieces. To do this, measure the length and width of the openings. Then subtract the thickness of the edging strips (cut next). And, to allow for a 1/16" gap around the doors, subtract ⅛" from the length and the width.

In my case, I cut the **closet door (W)** 17⅛" wide and 47⅝" long. The **center door (X)** is cut 12⅞" wide and 68⅝" long.

EDGING STRIPS. After both door panels have been cut to size, the door edging strips can be cut. The **edging strips (Y)** on the sides of the doors are the same width as the **edging strips (Z)** for the top and bottom of the doors, see Fig. 17. But note that the top and bottom strips are thinner, see Fig. 17a.

After all four edging strips have been cut and glued onto the door, they can be trimmed flush, see Edging Plywood on p. 20.

Then, I routed a decorative profile on the front of the (thicker) side strips only, see Fig. 18. It's the same bit used for the shelf edging and molding strips, refer to Fig. 14a.

INSTALL DOORS. After the doors are complete, the next step is to install them. To do this, I used brass-plated offset hinges, see Fig. 19. Note: Each door has three hinges, and the middle hinge is centered on the length of the door.

DOOR STOPS. After installing the doors, I made a pair of **door stops (AA)** for the door on the center unit, see Fig. 20. These are just short blocks of wood with a miter cut across one end to fit behind the bevel strips.

The stops also provide a mounting surface for a pair of magnetic catches. I attached these next, see Fig. 20a.

Then I installed a pair of magnetic catches for the closet door, see Fig. 21. Since these can mount directly to the closet side, no stops are needed.

To complete the inside of the closet, I added a pair of closet pole sockets, see Fig. 21. And a 1¼"-dia. dowel for the closet pole.

DOOR PULLS. The last thing to do to the doors is add door pulls. For these, I decided to make my own, see box on the facing page.

Then the pulls can be attached to the door, centered on the length, see Fig. 22. Shop Note: Drill the pilot holes the full length of the screws to prevent splitting out the dowel handle, see Fig. 22a.

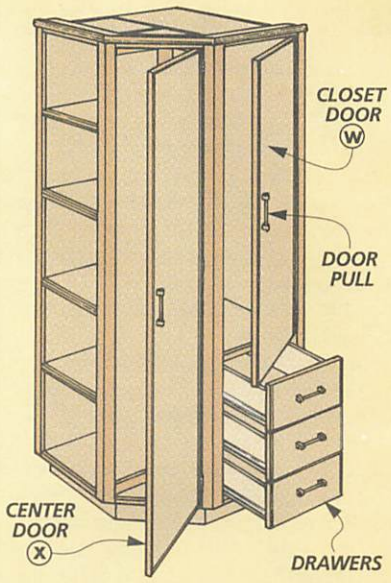

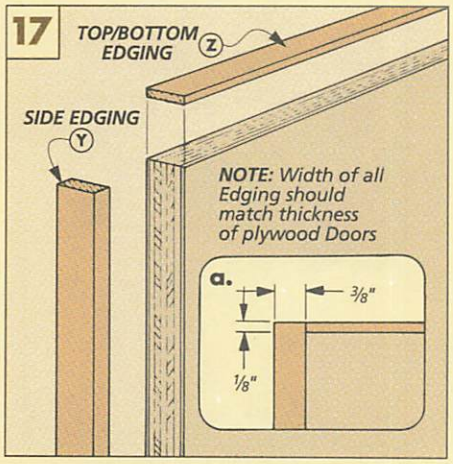

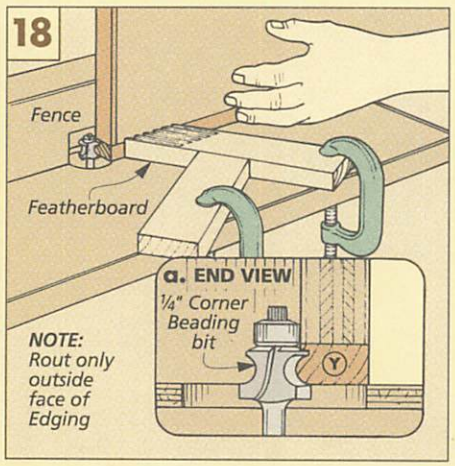

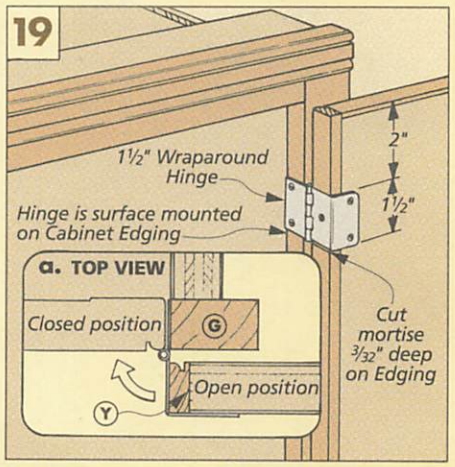

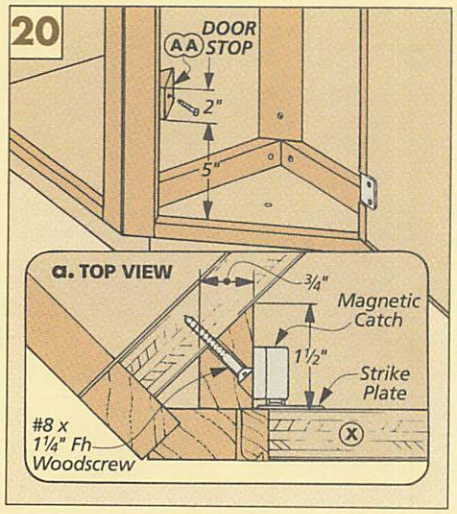

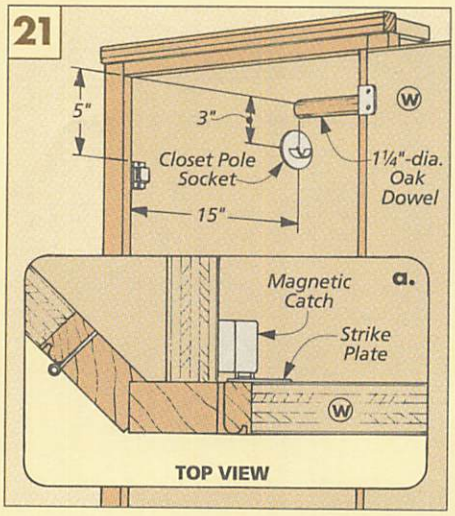

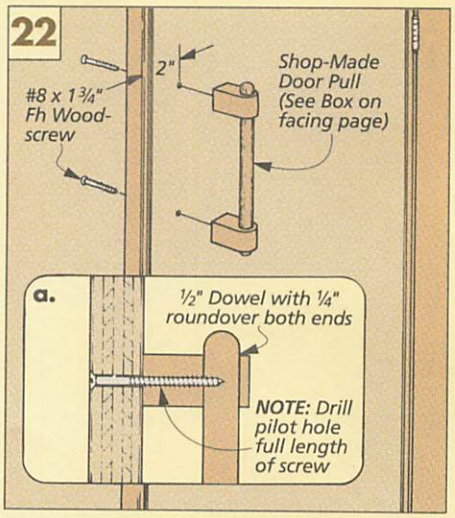

DRAWERS

After the doors are complete, work can begin on the drawers. I built three of them, all the same size, from ½"-thick oak.

DRAWER PARTS. When measuring for the drawer parts, take into account the length of the drawer slides (the ones I used are 24" long). Also, my drawer slides call for ½" clearance on the sides of the drawers.

Then cut the **drawer front/backs (BB)** and **sides (CC)** to finished size, see Fig. 23. For the **drawer bottoms (DD)** I used ¼"-thick tempered Masonite, see Fig. 23a.

DRAWER SLIDES. After the drawers are glued up, the drawer slides can be attached. To do this, I first installed the cabinet half of the slides in the cabinet, spaced at equal intervals. Then I attached the drawer half of the hardware in the same position on each of the drawers.

FALSE FRONTS. After the drawers were installed, I cut plywood **false fronts (EE)**, see Fig. 24. These pieces are sized so that after the edging is applied there's a 1/16" gap all around, see Fig. 24a. (In my case, the false fronts are all 17⅛" wide and 6 11/16" long.)

DRAWER PULLS. After attaching the false fronts, the next thing to do is to add the drawer pulls, see Figs. 25 and box at right.

Finally, the cabinet can be finished. For one option see the box below. ❑

SHOP-MADE PULL

A shop-made door or drawer pull can be made in less time than it takes to go to the hardware store. And they're less expensive, too. The pulls for the Corner Cabinet are made like the bar for hanging a towel. A length of dowel fits into holes in a pair of brackets. The brackets are cut from an oversize blank with rounded-over ends, see below.

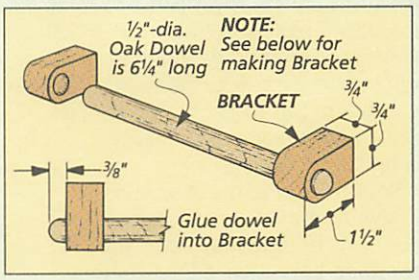

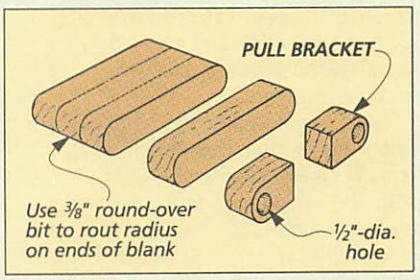

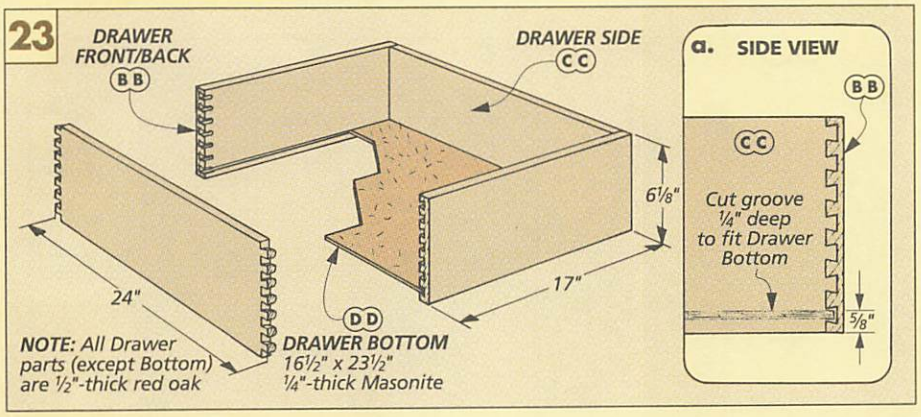

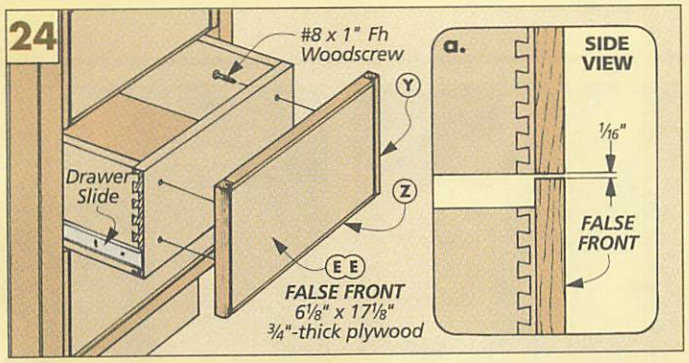

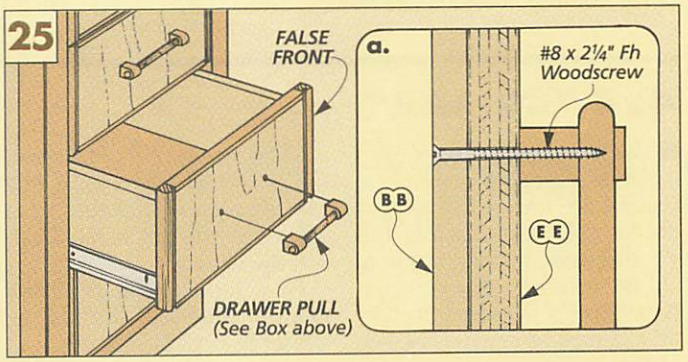

COLOR STAIN

There are a variety of ways to finish a project as versatile as the Corner Cabinet. For one version of the Cabinet I simply applied a clear wiping varnish, see main photo on page 6. But for the other I decided to add some color. Paint was out because I didn't want to mask the grain in the oak plywood. So I used a "new" type of stain — pastel wood stain, see photo.

The brand of stain I used (Minwax, see page 31) comes in several colors. After some experimenting on pieces of scrap plywood, I decided on Slate Blue pastel. But I thought using *all* blue might be too much.

So I used a lighter color of the same stain for variety. (The color I chose is called Winter White.) I applied this to the molding at the top of the Cabinet, and also to the door/drawer pulls and drawer sides, see photo on the back cover.

USING PASTEL STAINS. Pastel stains are like ordinary wood stains, except with different color pigments. They're applied like stain, too. Simply wipe on with a brush, then wipe off any excess with a clean rag.

I found that two coats of each color looks best. Then, to protect the surface, I applied two coats of General Finishes' wiping varnish.

Shop Notes

ROUTING THIN STRIPS

■ The Entry Door on page 23 has raised panels held in place with narrow strips of molding. Ripping the narrow strips wasn't a problem. But to get the decorative look I wanted, the strips all had to be routed.

Routing thin strips of wood is always tricky on the router table. And the molding strips on the door have two edges that need to be routed. A narrow rabbet along one edge and a roundover along an adjacent edge, see Detail in drawing.

There are actually two challenges to routing these strips. First, because they're thin and long, the strips can pull away from the router table fence or lift off the table. (Thin strips tend to behave like noodles.)

The second challenge is more important — routing the strips safely. The problem is, thin strips of wood aren't much of a barrier between your fingers and the router bit.

The best way to rout thin strips accurately and safely is to have complete control over the workpiece as it's fed across the router bit. So I create a "tunnel" that traps the thin strip and holds it where I want it.

To do this, I use a featherboard on top for a hold-down. And an edge guide to keep the piece from rolling and tight against the fence. Then, feed the piece using a push stick, see drawing.

Note: For the best control, I routed the roundover after routing the rabbet, see Detail a.

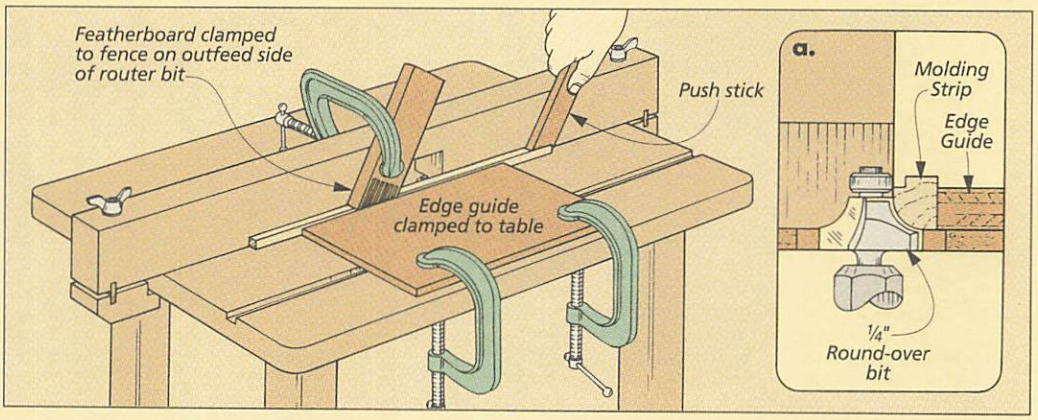

4x4 "COLLAR"

■ The Lawn Sign on page 16 has a pair of decorative grooves cut around the top of the posts. I used a table saw to do this. But we also came up with a way to cut the grooves using a router. It involves a two-part "collar" that clamps around a 4x4, see photos at right.

A standard 4x4 measures 3-½" square, so the jig has to be built to fit tightly around it. By making it with two separate parts ("jaws"), the jig can be loosened for slipping onto a 4x4. Then tightened with a pair of wing nuts, see drawing.

MAKING THE JIG. I built the jig from some scrap cut to a length of 5", see drawing. But to fit around a 4x4 and still be adjustable, all four parts of the jig are ripped to a different width.

Before the jaws are assembled, cut a notch in the two widest pieces. Note: The notches must match the diameter of the hanger bolts added next.

Then, to secure the halves of the jig around a workpiece, I installed a pair of hanger bolts that align with the notches cut earlier, see drawing.

Now, the two parts of each jaw can be glued and screwed together to form the collar.

USING THE JIG. There are only a couple things to keep in mind when using the jig. First, make a pencil mark on the post where the grooves will be routed. Then place the jig on the post and lightly tighten the wing nuts.

Next, position the jig and router so the router bit aligns with the pencil mark.

Now the wing nuts can be tightened and the groove can be routed, see first photo.

ANOTHER USE. It turns out the jig can also be used for cutting a 4x4 to length. Just clamp the jig in position and use it as a guide for your circular saw, see right photo above. Different tool, same procedure.

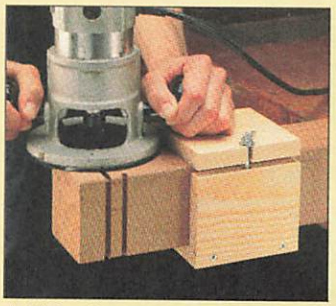

▲ *This shop-made collar guides a router and helps produce perfect grooves around a 4x4 post.*

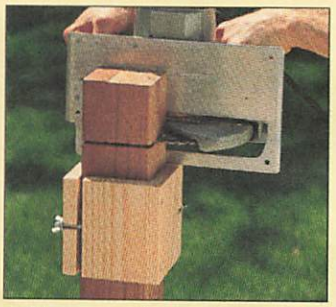

▲ *The same jig can be used for cutting a post to length. The result is a smooth, flat end.*

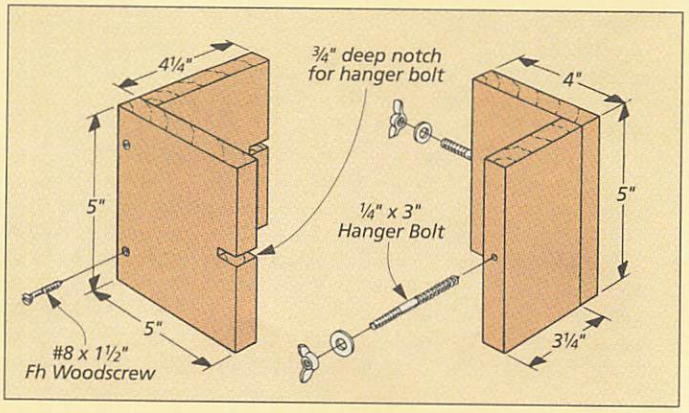

ROUND EDGES ON TENONS

■ Fitting a tenon to a mortise is usually a simple matter. Typically, I would round over the edges of the tenon with a rasp. (To fit the rounded corners of a mortise cut on the drill press.)

But when building the Entry Door I was faced with a lot of tenons, which meant a lot of work with a rasp. There had to be a more efficient method.

So, to save time and make it easier, I used the router table to do most of the hard work.

To do this, I start with the first two edges of the tenon, see Fig. 1. These are rounded over by routing from right to left in the usual manner, see Fig. 1.

Note: The round-over bit must be raised above the level of the router table. And to avoid damaging the shoulders of the tenon, stop routing before reaching the base of the tenon.

For the other two edges of the tenon, the procedure changes. The base of the tenon must be first plunged into the bit just in front of the shoulder, see Fig. 2. Then simply rout from right to left just as you did before.

Finally, come back and clean up all the "unrounded" corners of each tenon with a chisel, see photo at right.

▲ *A chisel completes the job of the router when rounding over the sharp corners of a tenon.*

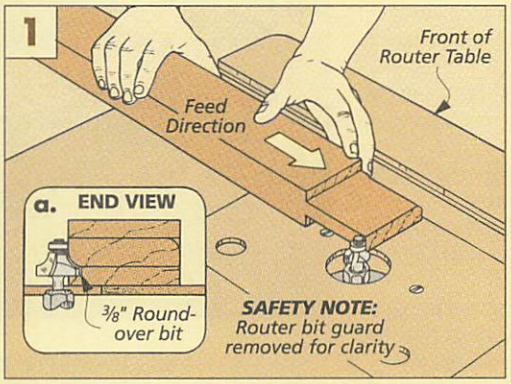

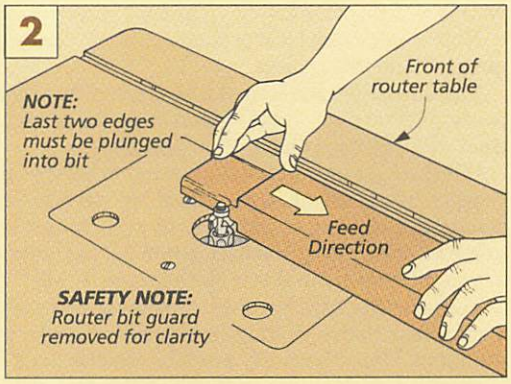

THREE TIPS FOR FITTING MOLDING

■ To hold the panels in the Entry Door on page 23, I used mitered molding strips. But getting small miter joints to fit perfectly takes some time. Here are a few tips that make the job quicker and more accurate.

MEASURE DIRECT. When the miter gauge is set to exactly 45°, I cut a miter on one end, see first drawing below. But the critical cut is the second miter that produces the finished length of the molding strip.

To mark the finished length I don't measure the opening as you might expect. Instead I find it's more accurate to place the strip in the opening and mark directly on the strip, see drawing.

PRESS FIT. Installing the molding strips in the opening can also be a challenge. Actually, it's the last strip that tends to be a problem — it often has to be jammed into the opening between the two adjacent strips.

So to avoid damaging the mitered ends, I insert the last two strips with a "press fit" motion, see second drawing. This ensures a tight fit with no damage.

UNDERCUT. If the last strip refuses to fit into the opening, I don't automatically cut it shorter. Instead, I undercut the bottom inside end of the strip using a sharp chisel, see third drawing. This usually helps the strip fit in the opening.

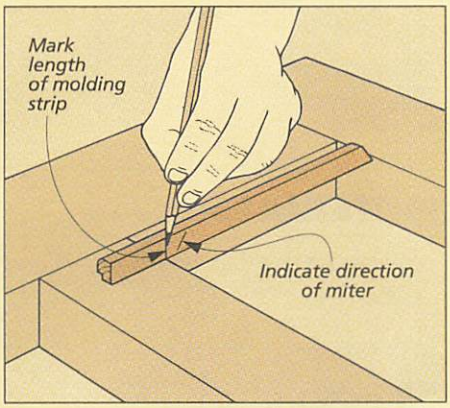

Measure Direct. *When fitting small strips of molding, it's always more accurate to take a direct measurement than it is to use a tape.*

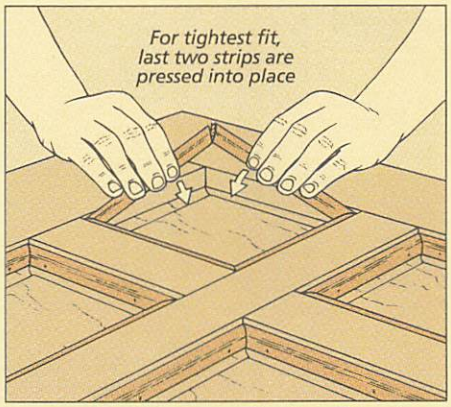

Press Fit. *If the last strip of molding is cut to fit perfectly, it may be difficult to insert. Instead, insert the last two at the same time.*

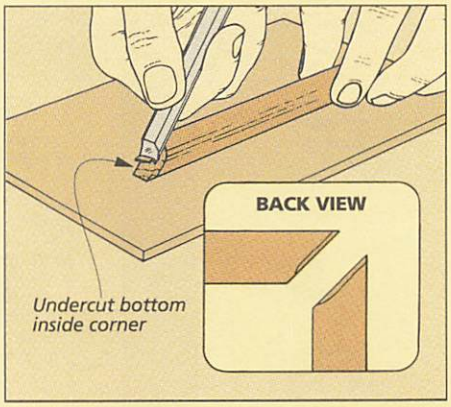

Undercut. *A strip that fits too tight may not be too long. Rather than cut it shorter, first use a chisel to "relieve" the end of the miter.*

Lawn Sign

Address numbers on your house can be difficult to see. Here's a sign that puts them out in the open.

You don't think much about the numbers on your house until people say they got lost trying to find you. The problem is, house numbers are usually too small or hidden by an overgrown bush. So I designed a Lawn Sign that sits out in the open. This way, your house number can be "planted" where it's easier to see.

Note: Check that local ordinances allow yard signs before beginning to build this project.

The Lawn Sign has a routed sign panel that "floats" between two posts and two rails. It isn't glued or nailed so it can expand or contract with seasonal changes in humidity.

But the best part of the Sign are the "raised" numbers. To give them a hand-carved look, I used my favorite carving tool — a router. Set up with a core box bit, the router is a great tool for quickly carving away the background of the numbers. And it leaves a "rough" background just like a gouge would.

To make the sign durable, I used cedar for all the wood parts. Cedar has relatively straight grain which make it easy to rout the numbers. Plus, it's readily available and the cost is reasonable.

POSTS. The first step in building the sign is to make the **posts (A)**. To do this, I cut an 8-foot-long 4x4 in half, producing posts just under 48" long. The post can be cut to length later. Just make them long enough for the spot where the sign will be located. (The bottom of our sign in the photo is about 8" off the ground.)

GROOVES. Next, decorative grooves are added near the top of each post. The key to making the grooves look right is to get them aligned all around the post.

To do this, I clamped a block to the table saw fence. This acts as a stop block for aligning the post to the blade before each cut, see Fig. 1. Then clamp the post to the miter gauge to make sure it

EXPLODED VIEW

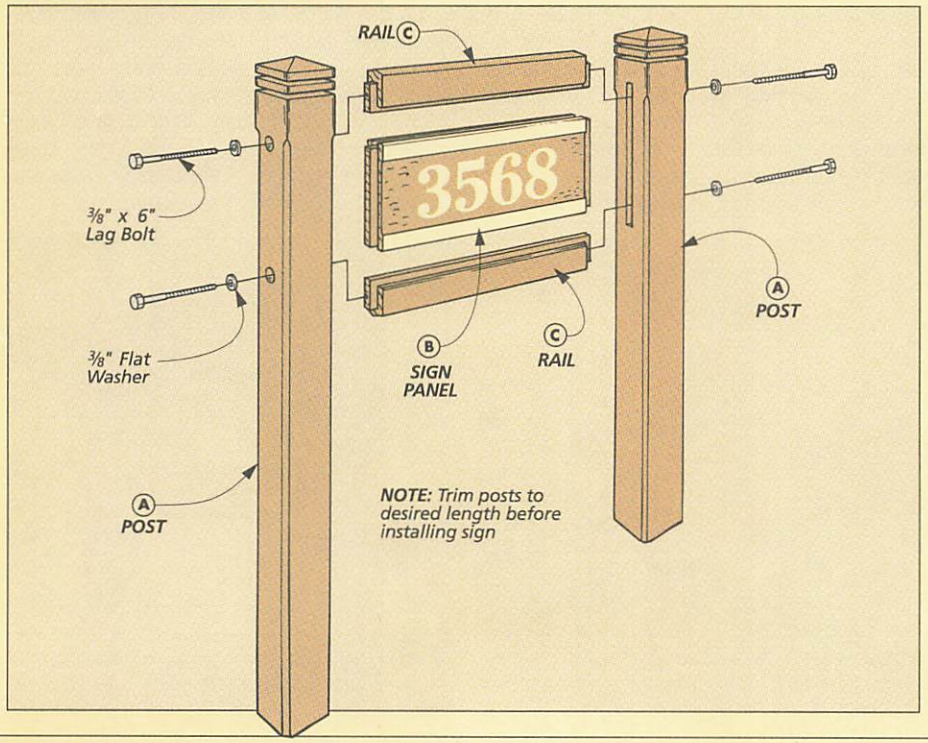

CROSS SECTION

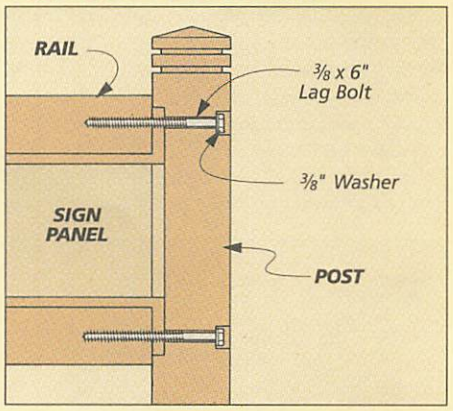

MATERIALS

WOOD PARTS

A	Posts (2)	3½ x 3½ - 47⅞
B	Rails (2)	1½ x 3 - 18
C	Sign Board	1½ x 7 - 18

SUPPLIES

- (4) ⅜ x 6" Lag Bolts
- (4) ⅜ Flat Washers

doesn't move during the cut. (See Shop Notes on page 14 for an alternate technique and jig to cut these grooves using a router.)

BEVEL THE POST. After the grooves have been cut, four bevels are cut across the top of the post, see Fig. 2. These make the top look like a flat pyramid. I added the bevels for two reasons. They give the posts a finished look on top, and help it shed water.

Before cutting the bevels, measure ½" up from the top groove and mark the location on all four sides. The trick to making the pyramid shape is to cut all the sides the same size. You'll know that the bevels have all been cut equal if the pyramid ends up with a sharp point on top.

To get the sharp point, you need to prevent the post from moving during each cut. After the post is aligned with the blade, clamp it to the miter gauge to hold it in place, see Fig. 2. Then cut the bevel.

MORTISES. After the posts are beveled, the next step is to cut a shallow mortise in each post to hold the sign panel and rails. I used a Forstner bit in the drill press to remove most of the waste, see Fig. 3. Then square up the sides and ends of the mortise with a chisel.

MOUNTING HOLES. Now, flip the post over and drill two counterbored shank holes through the post. Drill the holes so they are centered on the mortise. These holes will be used later to attach the rails that hold the sign, see post detail.

DECORATIVE COVE. Finally, I routed a cove on all four edges of the posts, see Figs. 5 and 5a. First draw a "stop line" around the post near the top. Then use a ⅜" cove bit to rout the coves, stopping at the line.

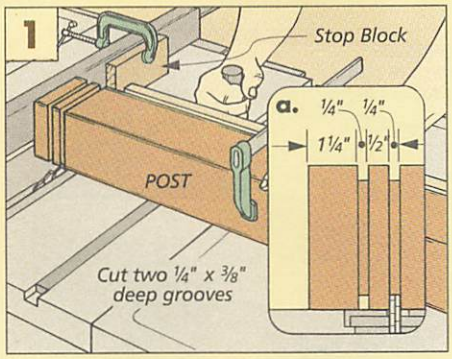

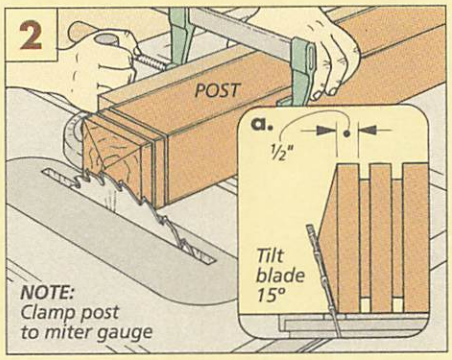

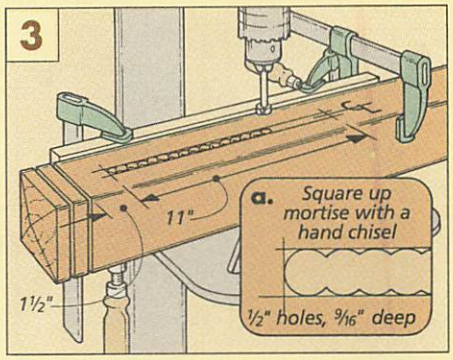

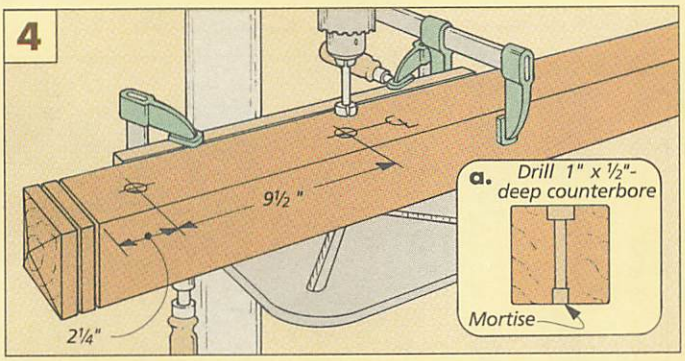

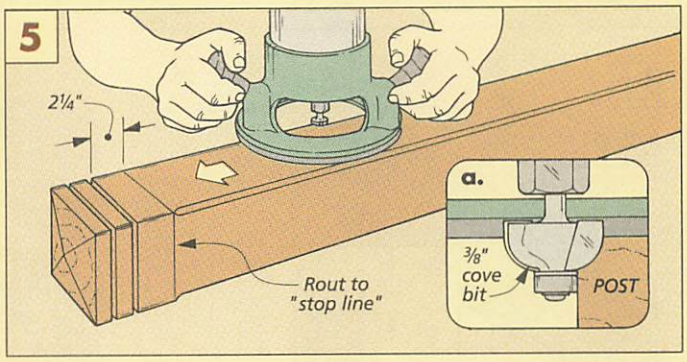

CREATING A PATTERN

The secret to a good-looking Lawn Sign is the placement of the numbers. The wood parts of the project can be cut and assembled perfectly. But if the numbers aren't placed well, the sign may look like graffitti.

To create the pattern, start by cutting out the numbers you need from the list below. (If you prefer a different look, many art supply stores and pattern books have sets of numbers in other typefaces.)

BASELINE. When cutting out the numbers, be sure to include the baseline the number rests on. These baselines will be used to keep the numbers in a straight line. What may look unusual here, is for the numbers to "appear" to be straight the bottoms of the rounded numbers actually sit below the baseline.

SPACING. Now adjust the space between the numbers until the pattern looks proportional. The space between the numbers won't be the same. That's because rounded numbers (the 2, 3, 5, 6, 8, 9, and 0) need less space between them than straight numbers (the 1, 4, and 7).

When the numbers are laid out, tape them to the paper to keep them from shifting. Then enlarge the pattern on a photocopier so the numbers are 4" tall. See page 31 to order a full-size pattern of numbers.

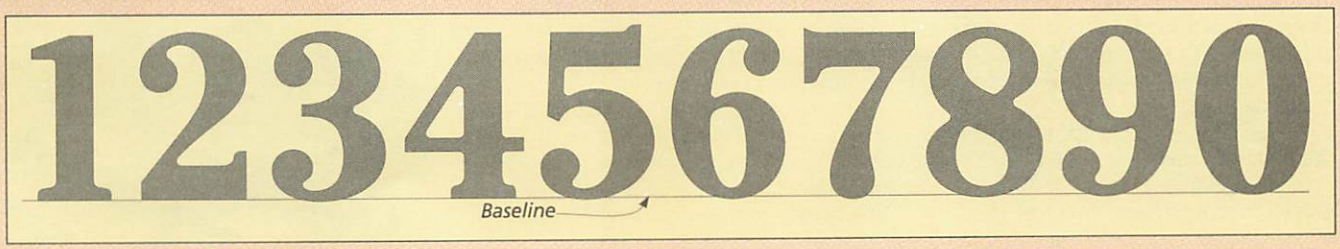

SIGN PANEL & RAILS

When the pattern is complete, work can begin on the sign panel and supporting rails.

SIGN PANEL. I started with an oversize blank to make the **sign panel (B)**. It's three 2x4's edge-glued together then cut to finished size, see Fig. 6.

The sign panel will move with humidity changes. To allow movement, I cut grooves on the top and bottom edges to accept the tongues on the rails, see Fig. 6a.

Then I cut tenons on the ends to fit the mortises in the posts, see Fig. 6b.

Next, cut two kerfs across the front of the panel, see Fig. 7a. They'll help to center the pattern on the blank.

Finally, attach the pattern with spray adhesive or rubber cement, see Fig. 7. Then the sign can be routed. (See the next page on routing signs.)

RAILS. With the panel complete, the next step is to make the **rails (C)**. The rails support the panel between the posts. Tenons on the ends fit the mortises and tongues on the edges fit the grooves.

First, cut the rails to finished size, see Fig. 8. Then cut the tenons and tongues. Sneak up on the thickness so they'll fit snug. Finally, rip a double bevel (it looks like a small roof) on the remaining wide edge of the rail.

DECORATIVE BEVELS. To make the sign panel stand out from the rails, I cut an 1/8" bevel that "accents" the edges and keeps them from splintering, see Fig. 9.

DRY ASSEMBLY. Finally, I was ready to assemble the sign.

But first, dry clamp it together to mark the pilot hole location, see Fig. 10. Then, bolt the sign together and find a good spot on your lawn to plant it. ❑

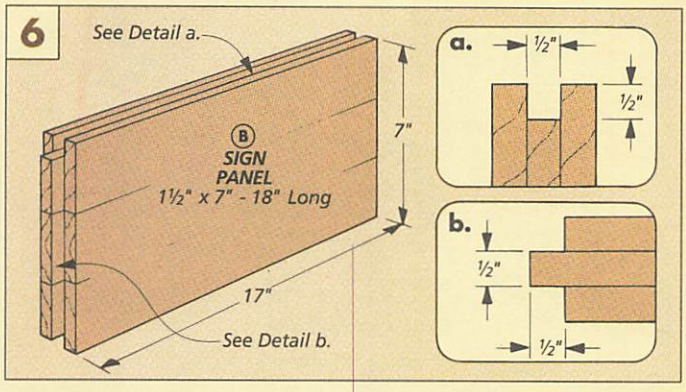

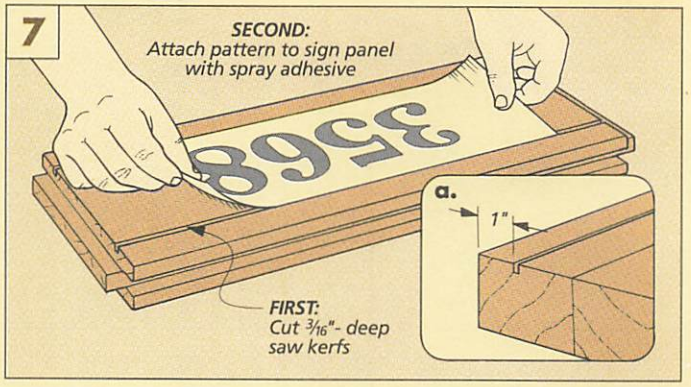

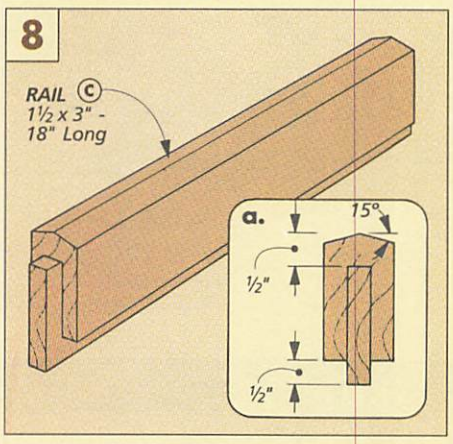

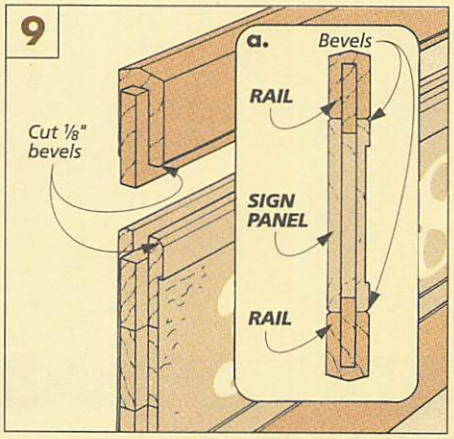

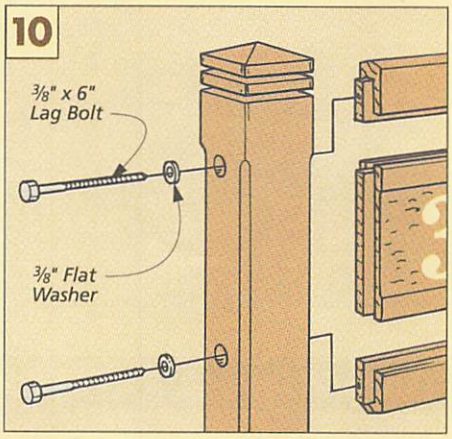

FINISHING THE SIGN

Even though the sign is made with weather resistant wood, it still needs to be protected from the elements.

To protect the panel and posts, I used an exterior wood stain. In my case Sherwin Williams' Exterior Semi-transparent Stain. It's formulated to prevent the natural checking that occurs when wood is exposed to the sun, and to help resist rot and water damage.

I used a stain with a light gray tint and applied two coats to the wood. The second coat is optional — only if there's lap marks that need to be covered.

After the stain has dried, I decided to paint the sign panel to add a little accent and make it more visible. So I used a white exterior paint (you can use latex or oil).

But I didn't want to paint the whole panel white. Instead, I painted only the faces of the numbers and borders (see photo at right). I left the background around the numbers gray.

The easiest way to do that is to use a foam brush. It's stiffer than a bristle brush, so it doesn't sag over the sides of the numbers. Use a light touch, and load the brush sparingly to prevent paint runs.

Routing Signs

A sign with hand-carved numbers is what I wanted. But I didn't want all the work. So I used a router with a core box bit.

The secret to making the sign "look" hand-carved is the router bit. It imitates the look of a hand gouge. The bumps and grooves it leaves behind look a lot like the kind a hand gouge would make.

TRACING NUMBERS. The first step to routing a sign is gluing a pattern of the numbers to the wood (refer to page 18 for attaching patterns).

Then I used a sharp knife to cut the outline of the number in the wood, see Fig. 1. The knife cut does two things. It keeps the wood from splintering when routing up next to the pattern lines. And it adds better definition to the outline of the number.

Finally, after the outlines have been cut, remove the background paper from around the numbers, see Fig. 1a.

SETUP. The next step is to set up the router for making signs.

I started with the router base. The first thing I do is replace the base with an oversize acrylic one, see photo. This lets me see the pattern lines better and the larger size supports the router as the waste (the background) is "carved" away.

Next, I'll install the router bit. The size of the bit is important. It has to be small enough to fit the curves and corners of the numbers when removing the waste. (In my case, I used a ¼"-dia. core box bit.)

ROUTING TIPS. Probably the most important thing I did when it came time to rout the sign, was to take the time to practice on a piece of scrap. I wanted to get a feel for how slowly to feed the bit when routing at the full 5/16" depth.

When routing the numbers for the actual sign, I found it helpful to rest my forearms on the workbench, see Fig. 2. This gives you more control of the router. Not to mention making it easier on your back.

And when routing close to the pattern lines, feed the bit slowly to nibble away at the wood, see Figs. 2a & 3. When possible, I routed around the numbers in a clockwise direction. That way the bit was less likely to splinter the edges.

Finally, for a "hand-carved" look, it's important to vary the way you remove the waste. Don't try to make all of the cuts completely straight. Let the router wander a little to make wavy looking bumps and ridges.

When the sign is complete, I used sandpaper to slightly round the edges of the numbers. This gives the sign a more finished look, and it keeps the edges from getting snagged and splintering out. ❑

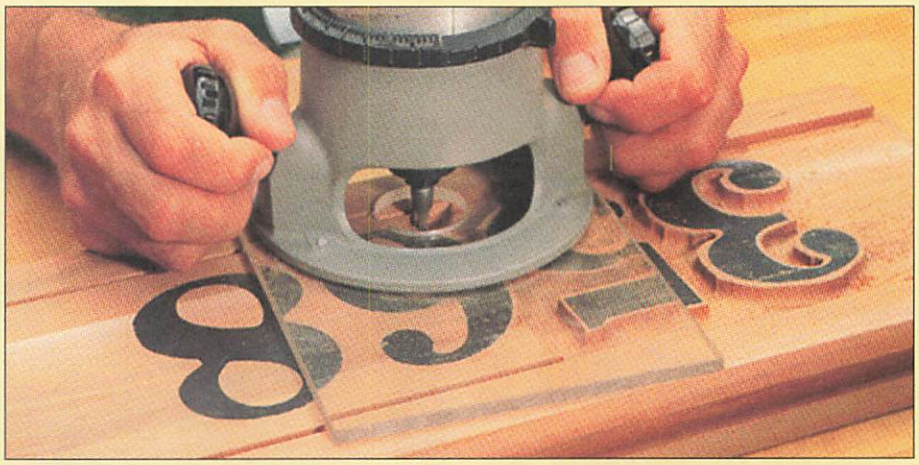

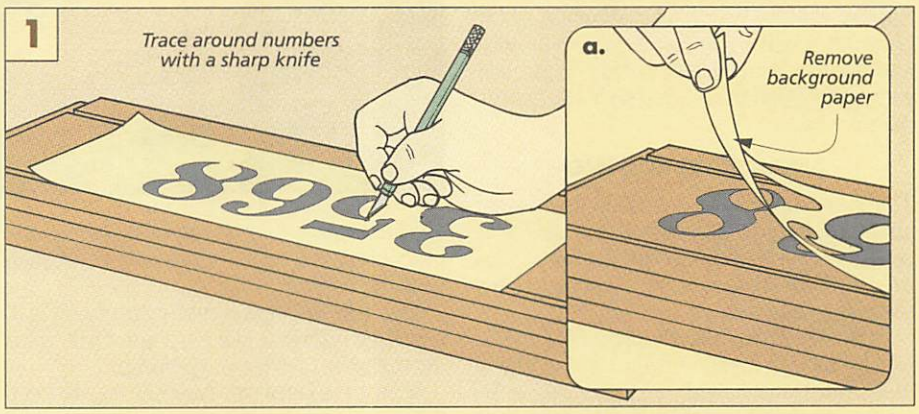

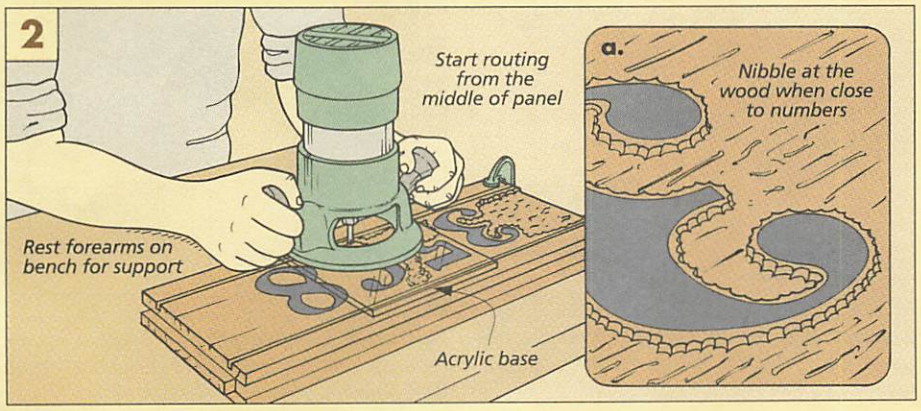

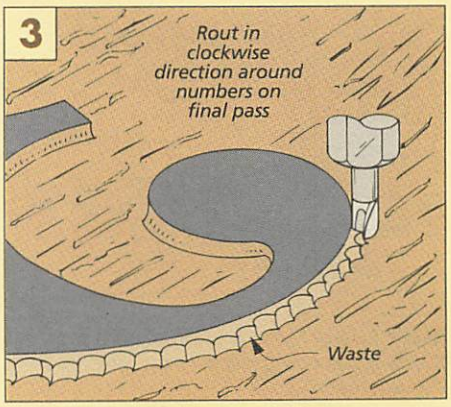

Edging Plywood

There's no trick to attaching hardwood edging to plywood. But there are some basic techniques you can use to get better results and make the job easier.

Plywood is a great material. It's stable (won't expand and contract), readily available, and relatively inexpensive compared to hardwood. The only drawback is the edges aren't very attractive.

So what I'll do most of the time to deal with this problem is use a piece of hardwood to cover the edges. That's because I can make the edging right in my shop. But there's more to applying edging than cutting strips from a board.

Generally, I'll follow the same basic steps whenever I attach edging to plywood. First, I figure out the way it'll be attached to the plywood. Then I plan the best way to glue and clamp it. And finally, I decide on the easiest way to finish the edging so it's flush with the plywood.

ATTACHING EDGING

There are three different methods I use for attaching edging to plywood. I'll glue it directly to the plywood, cut a tongue and groove in the pieces, or use a spline to keep the pieces aligned.

GLUE ON. By far the simplest (and quickest) method of installing edging is to glue it directly to the plywood, see Fig. 1. I'll cut the edging oversize so that it stands a little proud (about 1/32" on either side of the plywood). This way I can trim the edging flush to the plywood. But there's one problem.

When the plywood pieces are long, it can be a challenge to keep the edging in position. It wants to slide and squirm around until you get the clamps tightened. And if the edging drops below the plywood face as the glue dries, you can't trim the plywood flush with the edging.

One way to get around this problem is to nail the edging in place. (Note: Drill holes for the nails to prevent splitting.),

TONGUE & GROOVE. Another way to keep things aligned is to attach the edging with a tongue and groove joint, see Fig. 2. A tongue cut on the plywood edge fits snugly into a groove cut in the edging.

The length of the tongue doesn't have to be very long (or the groove very deep) to keep things aligned. But here again, the edging should stand proud of the plywood so the edges can be trimmed flush.

SPLINE & GROOVE. Sometimes I'll use a spline to attach edging, see Fig. 3. Grooves are cut in the plywood and edging. Then a spline is made to fit the grooves.

The thing to keep mind is, it's difficult to cut a groove on the edge of plywood with a table saw. Especially when working with large pieces. To solve this problem I'll use a slot cutter in my router to cut the grooves.

The material that works best for splines is Masonite. Its uniform thickness makes it easier to fit the spline in the grooves. And once again, the edging should be oversize so it can be trimmed flush later.

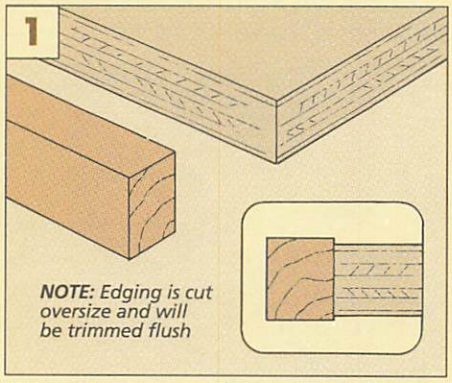

Edge Glue. *The quickest and easiest way to hide a plywood edge is to glue a piece of solid edging directly to it.*

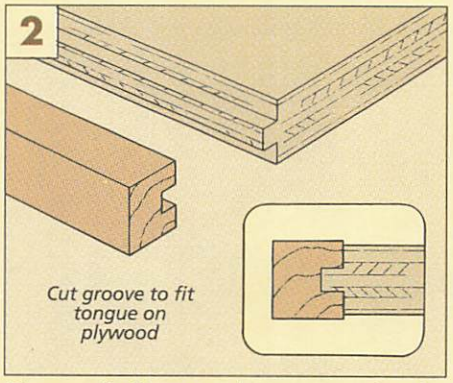

Tongue & Groove. *A tongue on the plywood mates with a groove in the edging to keep long pieces of edging aligned.*

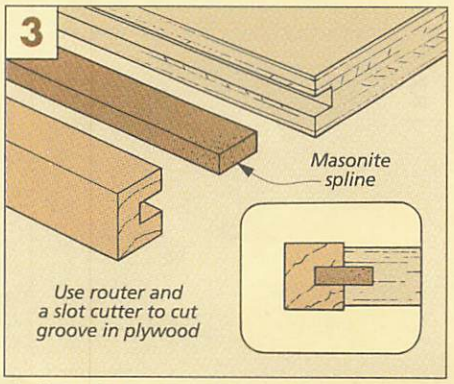

Spline & Groove. *Often I'll use a spline on large pieces of plywood to keep the edging and plywood aligned with each other.*

GLUING & CLAMPING

The secret to doing a good job of edging plywood is to apply even clamping pressure to the pieces. Keeping even pressure eliminates the gaps that crop up while the glue dries. Here are a few tips I've found helpful.

GLUING. When gluing edging on plywood, use yellow glue. It has a shorter working time, so it sets up quickly and keeps the edging from sliding around.

I also use a small brush to spread the glue on both the plywood and the edging. It helps to get a uniform coat for good adhesion. But I don't use a foam brush—it always snags on the plywood edges. Instead, I use an inexpensive bristle brush. It carries a lot of glue and spreads it evenly. And it's reusable after it's rinsed out with water.

Usually I'll apply two coats of glue to the plywood edge. The end grain on the plywood absorbs glue like a sponge. I'll let the first coat soak in and then quickly come back with another light coat.

CLAMPING. After the glue is applied, the edging gets clamped in place. Clamping is a numbers game. The more clamps you can use, the less chance for gaps. Ideally, I'd put a clamp every four to six inches. Unfortunately, that would take a lot of clamps for some of our larger projects.

But there are other ways to clamp edging without having a wall full of clamps. One method uses a board with a slight bow across the length, see Fig. 4. By clamping each end, the board applies pressure to the edging located between the clamps.

Another method uses a board and wedges, see Fig. 5. Wedges are pushed under the board to apply pressure to the edging. It's a good way to put pressure on a stubborn area that you can't get to stick.

But what if your clamps are too short? This is often the case when gluing edging to the top or bottom of a long panel. In that situation there's another little trick.

I like to clamp a short board across the width of the panel, see Fig. 6. This acts like an anchor so I can use shorter clamps and still get good results.

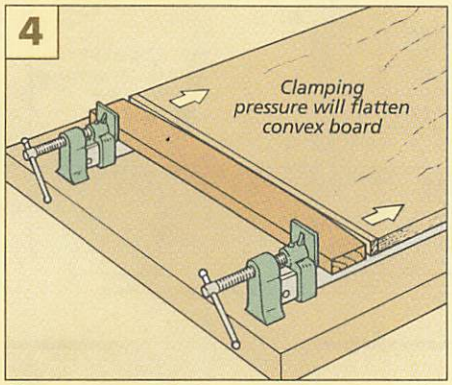

Convex Board. *A convex board applies clamping pressure along the full length of the edging with just two clamps.*

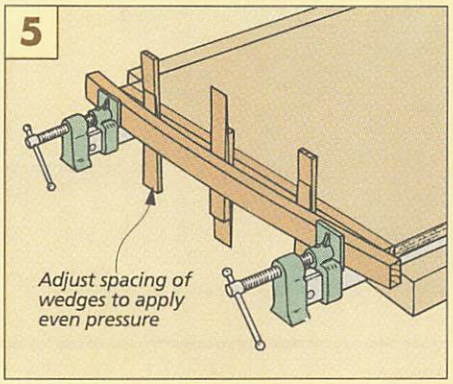

Double Wedges. *Two wedges used together exert equal pressure on the edging. Use extra pairs at stubborn spots so edging will stick.*

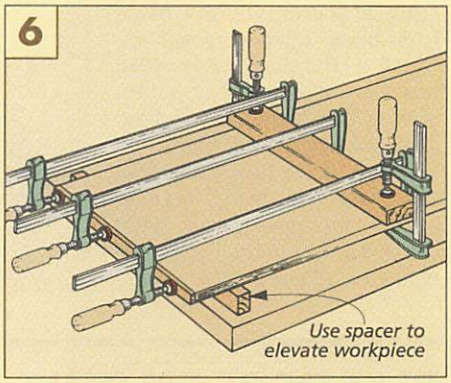

Clamp Anchor. *If your longest clamps are too short, clamp a board to the plywood as an anchor and use shorter clamps.*

FINISHING UP

The last step to finishing off the edging is to trim it flush with the face of the plywood. This is the point when the edging starts to blend with the plywood.

BLOCK PLANE. If there's only a small amount of edging that needs to be trimmed, I'll start by using a block plane, see Fig. 7. It removes most of the wood to get the edging close to the plywood. Note: I find it helps to hold the plane at an angle as you make your cut. This produces a cut with a slicing action and reduces the chance of tearout.

SCRAPER. To get the edging flush with the plywood, sometimes it's just as fast to use a cabinet scraper. I use just the end of the scraper and push or pull it along the edge, see Fig. 8. Try to keep the scraper level so you don't gouge the plywood.

FLUSH TRIM BIT. If there's a lot of edging to trim, the quickest way is to use a router and flush trim bit, see Fig. 9. The flush trim bit leaves a nice clean edge. But the only problem is trying to keep the router from tipping. A simple solution is to clamp a wide board to the plywood for more support.

Note: Refer to page 30 for a reader jig that also trims edging flush.

Finally, I lightly sand the edging to clean up any marks and to make sure the edging is flush over its entire length. ❑

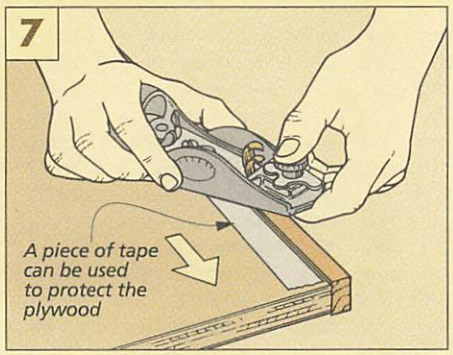

Block Plane. *To help prevent tearout, hold the block plane at an angle to make a shearing cut along the edging.*

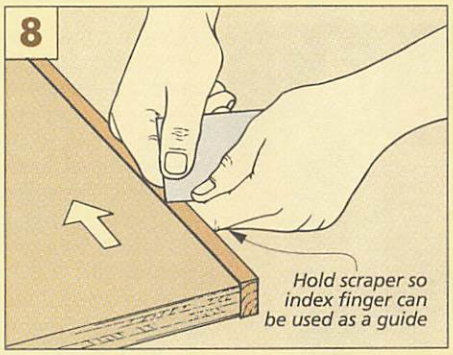

Scraper. *To keep the scraper from gouging the plywood use your index finger as a guide. And hold it level to keep the edging square.*

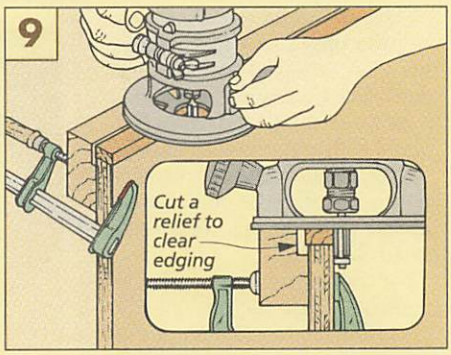

Flush Trim Bit. *The quickest way to trim a lot of edging is with a flush trim bit. Clamp a board to one side for more router support.*

Talking Shop

ZERO-CLEARANCE INSERTS

■ A zero-clearance insert in the table saw prevents narrow or thin workpieces from tipping into the blade opening. And for most cuts, it's safer to use and produces cleaner cuts with less chipout than the "factory" insert.

But a zero-clearance insert can also prevent the saw blade from being tilted very far, see Detail a. Because the opening has "zero clearance" on either side of the blade, it will bind against a blade that's tilted.

If you try to turn on a table saw with the blade binding against the insert, you could cause damage to the insert, the blade, or yourself. (I've seen a saw blade bent this way.)

UNDERCUT. There is a way to modify a shop-made zero-clearance insert to allow the blade to tilt. It's by "relieving" the bottom of the opening, see Detail b. To do this, run the insert over a V-groove bit in the router table.

This will allow the blade to tilt (slightly). But to tilt the blade more than about 20°, the insert should be replaced with one that has a wider opening.

Safety Note: Whenever I change blades, inserts, or the saw blade angle, I make a point of checking that the blade spins freely before turning on the saw.

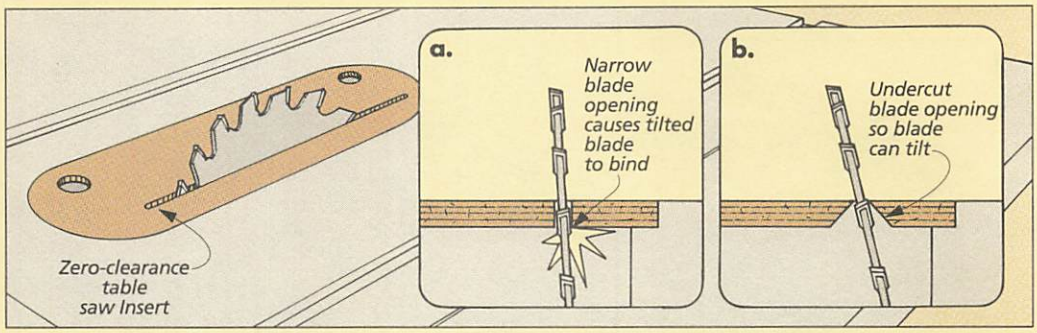

PLASTIC RESIN GLUE

■ When building the Entry Door on page 23, I decided to use plastic resin glue for the joints. A couple things make plastic resin glue a good choice for an outdoor project. First, it's highly water resistant. The Door can get rained on or snowed on, go through summers and winters, and still the glue will hold.

And second, plastic resin is inexpensive and available at many hardware stores. It costs about the same as yellow woodworker's glue. (For more information see Sources, page 31.)

Strength under wet situations isn't the only thing that makes this glue different from yellow glues. Plastic resin glues come in powder form and must be mixed with water before using.

Note: When mixed to the correct consistency the glue should be like a heavy frosting, see photo above right.

For mixing, I use a plastic medicine cup (a measuring spoon will also work) to get the correct amounts of powder and water. And a scrap stick of wood to stir it all together.

QUANTITY. Too often it's a guessing game trying to estimate the amount of glue that should be mixed up for any project. So, to be on the safe side, I always mix more than I think I'll need. This way, I won't run out of glue after the third tenon on a four-tenon assembly.

Note: I bought 16 ounces of Weldwood brand plastic resin glue, but eight ounces would have been enough for the Door.

WORKING TIME. Because the mixture begins to set up fast (from five to fifteen minutes), the glue must be applied quickly. To do this, I use the stick to spread the glue evenly on the workpiece.

And to allow the glue to dry completey, it's a good idea to leave the assembly clamped for at least twelve hours.

Finally, be sure to clean up any squeeze-out right away with a wet rag. Because it's plastic, the stuff can be a real pain to scrape or sand later on. Any residue will repel a coat of finish like a vinyl raincoat.

POLYURETHANE GLUE

About the time the Entry Door was nearing completion, I heard about a new type of outdoor glue. "Holds up even after being in water for hours. Stronger than the wood itself. Sands and scrapes easily. No mixing required."

It sounded too good to be true. So I sent away for samples of the two brands now available, see photo at left. (Refer to page 31 for sources of both Excel and Gorilla Glue.)

It turns out this new glue — polyurethane glue — isn't new at all. Woodworkers in Europe have been using it for years.

I decided to do some testing. I found that polyurethane glue goes on easily and holds up well. (Both brands are practically identical.) And scraping squeeze-out wasn't a problem.

Unfortuately, like many "new" products, the cost is high. But for my next outdoor project I'll be sure to keep polyurethane glue in mind.

FEATURE PROJECT

Raised Panel Entry Door

A well-designed door has a strong frame and panels that fit as tight in winter as they do in summer.

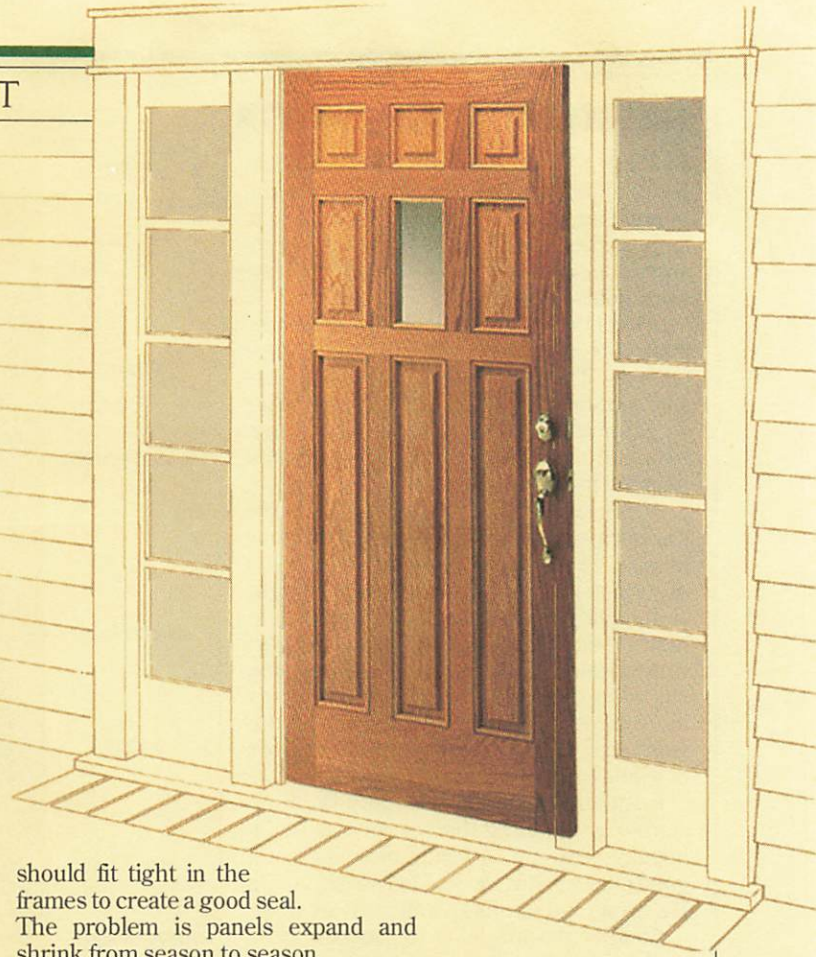

I've wanted to build an entry door for a long time — about eight years. That's how long it's been since we renovated the carriage house that sits behind our office building.

During this renovation, I got to watch Ken Munkel build and install seven solid oak doors. A couple things really impressed me about Ken's work. He built custom doors the old fashioned way using simple, strong joinery. And he could do it without a lot of fancy (i.e. expensive) woodworking tools. Basically, just a table saw, router, and drill press.

I was so impressed by Ken's craftsmanship that I hired him to design projects for *Woodsmith*. Of course, I also wanted him to show me how to build a door. But somehow, we've both stayed too busy to find the time.

Recently, there's been another "home improvement project" going on around here — we've been adding on to our office building. One project scheduled was an updated entry way. And I got to thinking it would be a good time to design my own Entry Door.

FRAME. A well-designed entry door must have a strong frame. But many doors these days get their strength from dowels or even lag bolts. Instead, this door is built with large mortises and tenons, see left photo below. This traditional joint doesn't need dowels. It's already plenty strong.

PANELS. There's another important design consideration. A door also has to protect against the weather. The panels should fit tight in the frames to create a good seal. The problem is panels expand and shrink from season to season.

With traditional raised panels, dry winter air will cause the panel to shrink. This can loosen the seal between the panel and the frame and let cold air into the house.

With this door, we paid special attention to the panels. They've been designed so they can expand and contract without affecting the seal, refer to page 26. And best of all, they're not any harder to make. In fact, this door is easier to assemble than a more traditional frame and panel door.

INSTALLING THE DOOR. Even when the door is complete, you're still not done with the project. The door also needs to be hung in place. To help with this, we've included an article to show you how, refer to page 28.

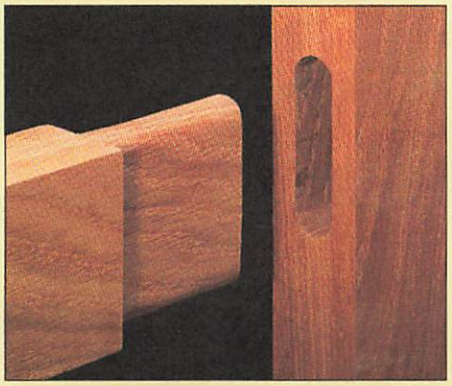

Frame. *While many doors use joinery that must be reinforced with dowels, the frame on this door is joined with simple but strong mortise and tenon.*

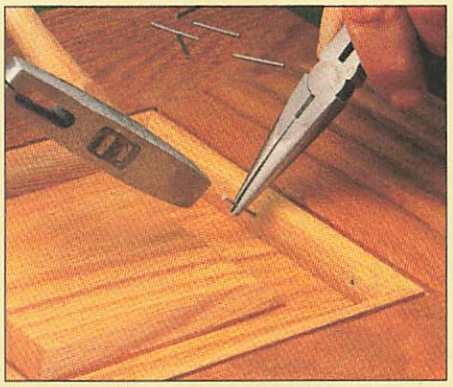

Panels. *After the frame has been glued up, the panels are secured with strips of molding. And unlike traditional panels, these panels will keep a tight seal.*

Installation. *The last step to installation is the easiest — adding the handle and dead bolt. But before this can happen, the door has to be trimmed to size and hung in place.*

DESIGNING THE DOOR

Building a frame and panel door shouldn't be intimidating. It's the same joinery used to build an inset cabinet door — only on a larger scale. And I found that designing an entry door isn't difficult either. *If* you follow a few guidelines, see Fig. 1.

DOOR COMPONENTS. Basically, all frame and panel entry doors have the same components. There's an outer frame with top and bottom rails and vertical stiles, see Fig. 1. And an inner frame that includes the inner rails and vertical mullions. These frames hold the panels in place.

OUTER FRAME. The design for the outer frame stays pretty much the same from door to door. These pieces are wider than the inner frame pieces to give the door strength and rigidity. It also has to accommodate hardware such as the handleset and hinges.

INNER FRAME. But while the outer frame stays the same, the inner frame design is more flexible. The number and size of the panels can change. And there are a number of window options too, see box below.

DESIGN DETAILS. For this Entry Door, we started by selecting the type of wood. Mahogany, redwood, or ponderosa pine are all good choices. But we decided on white oak. It's strong and stands up well to the weather.

Another design detail we wanted to include was a small window. It's simply a larger version of a peep hole. Adding a window meant the door would have three panels across the width. (We wanted the window centered.) This actually worked to our advantage. Narrow panels expand and contract less than wider panels.

DOOR SIZE. Since a door has to fit its opening, it can't be built just any size. Our door is 36" x 80" to fit a standard opening.

But like any inset door, this door starts out a little oversize. I added 1" to the length of the door with most of the "extra" being at the bottom. As for the width, I built it right at 36". You want to avoid trimming the long edges of the door if you can help it.

MINOR CHANGES. If your opening holds a standard door, there may still be a few minor changes. Measure the opening and simply add any extra width or length to the outer frame. (But if your opening is smaller, be careful about making the frame smaller, especially the stiles, see Guidelines in Fig. 1.)

MAJOR CHANGES. If your opening won't hold a 36" x 80" door, you'll need to make some more changes. Start with the overall dimensions and work from there. Just keep within the guidelines shown in Fig. 1, and you shouldn't have any problems.

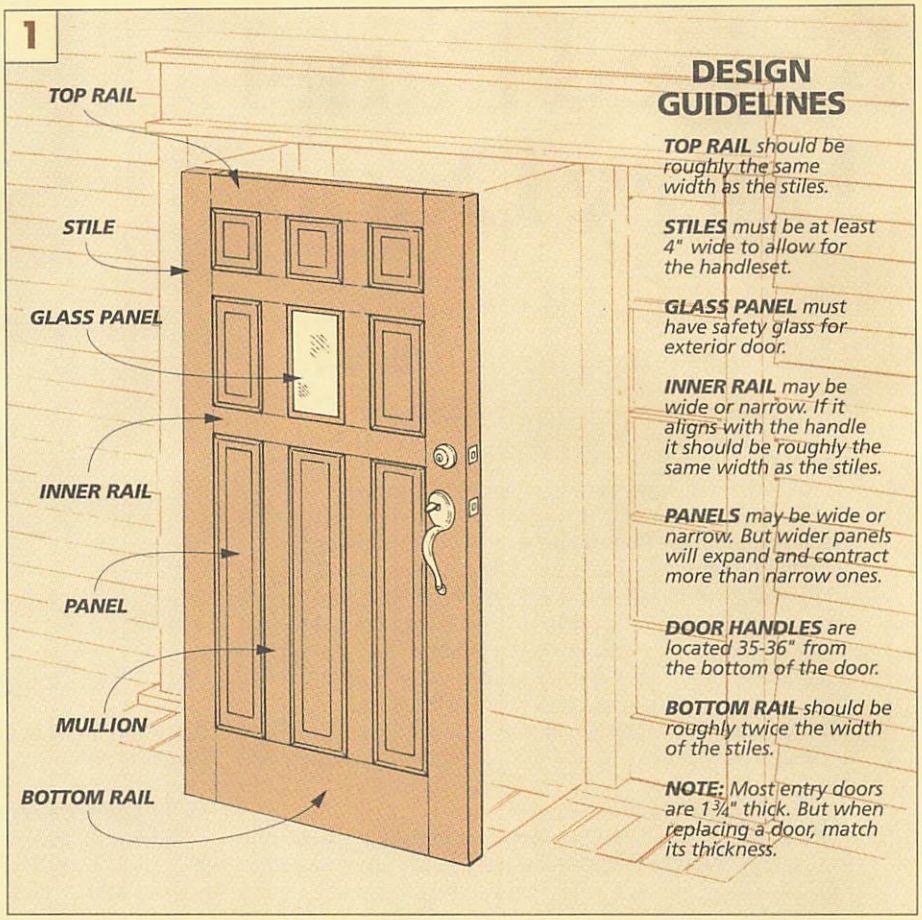

DESIGN OPTIONS

The look of a frame and panel door is easy to change. Just rearrange the inside pieces (the inner rails, mullions, and panels). The door will still be strong because the outer frame provides most of the strength.

Glass allows a number of design options. A big panel can "open up" the look of a door (Example A). Smaller ones just let in light (B). But if you want the most security and privacy, don't use any glass at all (C and D).

Another thing to consider is the position of the inner rail. When it lines up with the lockset or handleset, it's called a lock rail (A, B, and C). This is mostly visual. If the lock rail were close to the lockset but not aligned, it would look out of place.

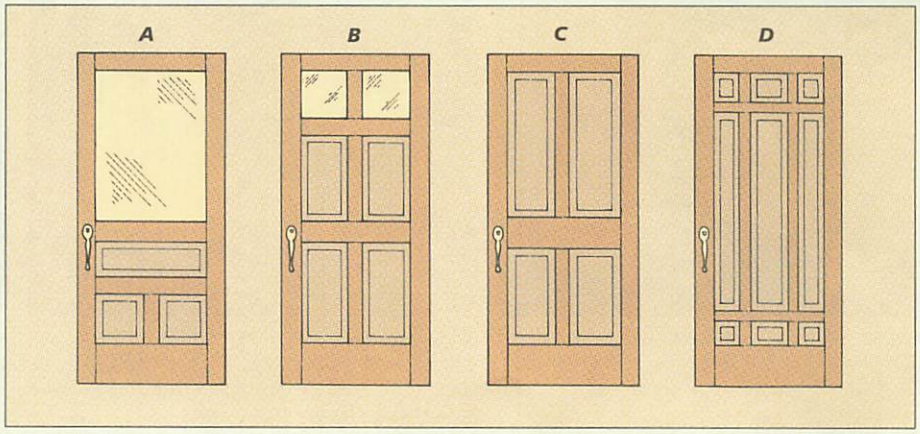

DOOR FRAME

With typical frame and panel joinery, the frame holds the panels in grooves. This means that all the pieces have to be assembled at the same time.

We took a different approach. The frame can be built and assembled before making the panels. So you don't have to mess with the panels when gluing up the frame.

MORTISE & TENON. To hold the door frame together, we decided to rely on common mortise and tenon joints, see Fig. 2. It's all pretty straightforward — except for the bottom rail. It has double tenons.

BOTTOM RAIL. The bottom rail is made extra wide to add strength and rigidity to the frame, see Fig. 2d. Joining the bottom rail to the stiles would require wide mortises (and tenons). But with mortises this wide, the sides are too weak and tend to bow out. So when drilling the mortises in each stile, I drilled double mortises instead, see Fig. 3.

DEEP MORTISES. Like everything else with this door, the mortise and tenons come in large sizes. In fact, the mortises in the stiles are 3/4" wide and 3 1/8" deep.

Note: Drilling the mortises in the door frame requires an extra-long Forstner bit, see page 31 for sources. (A long brad point would also work.)

ROUNDED TENONS. Usually after cleaning the mortises, I square the ends with a chisel. But squaring end grain on deep mortises isn't easy, especially with white oak. And doing eighteen would have been a real chore. So instead, I rounded the tenons to fit the mortises, see details in Fig. 2.

While rounding the tenons is easier, there are still a lot of them to do. This is pretty slow going with a file or rasp. So I came up with a shortcut on the router table, see page 15.

ASSEMBLY. When assembling the frame, it's got to end up both square *and* flat. This will be much easier if the surface you're working on is flat too. I used an old solid core door, but a sheet of plywood will also work.

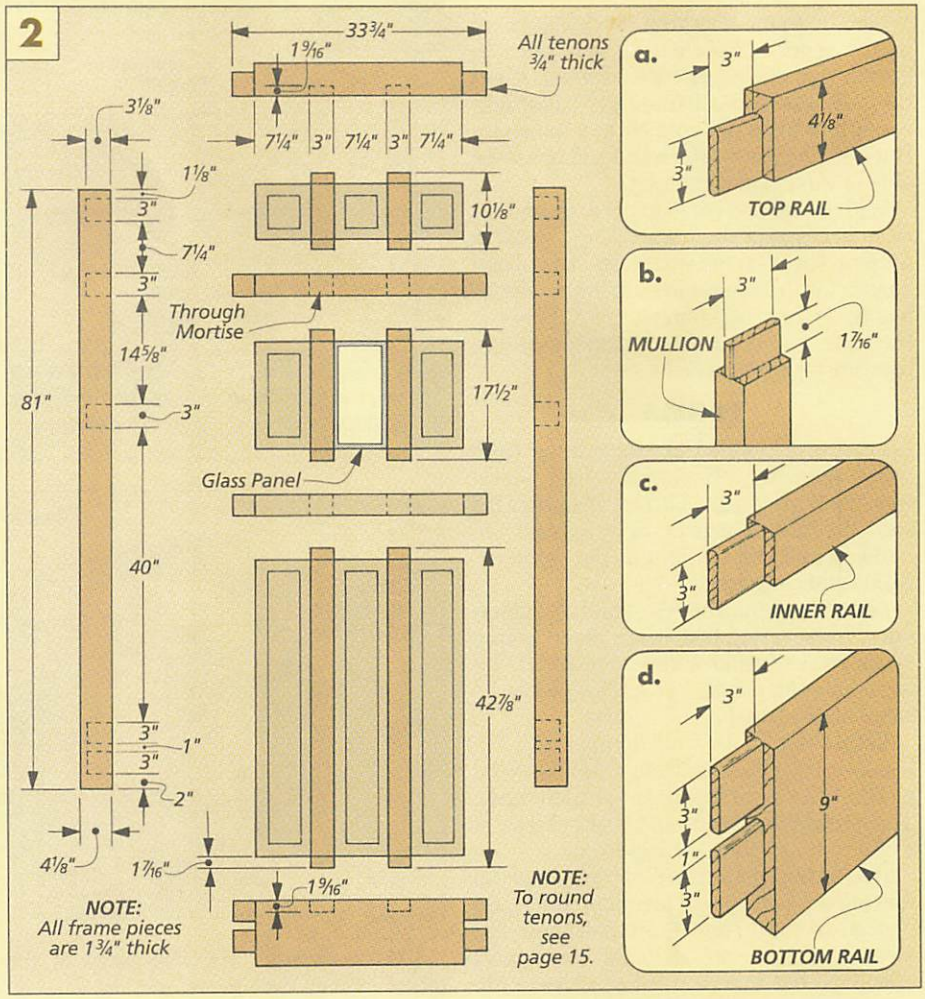

TWO STAGES. This door frame is large and heavy, and there are a lot of joints to fit together. So I assembled it in two stages.

First, I glued the rails and mullions and clamped them together, see Fig. 4. (I used plastic resin glue, refer to page 22.) I clamped these frame pieces in sections because I didn't have clamps long enough.

But I was concerned that the tenons might not line up with the mortises in the stiles. So to avoid this, I added the stiles "dry" to the first assembly to hold the rails in place, see Fig. 4.

When the first assembly was dry, I removed the stiles, added glue, and clamped the stiles back in place.

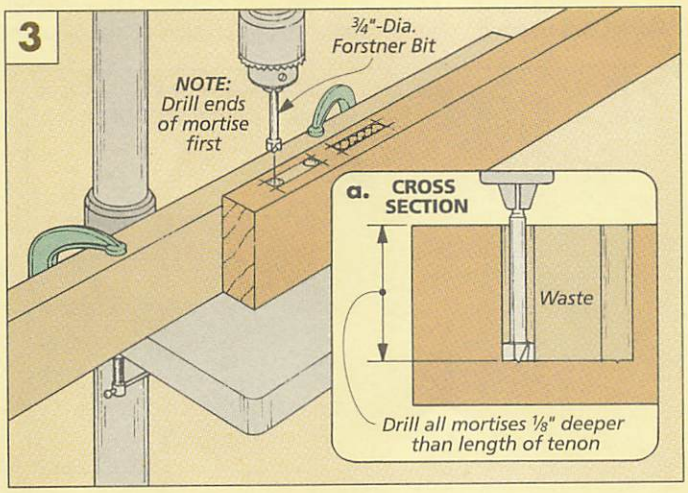

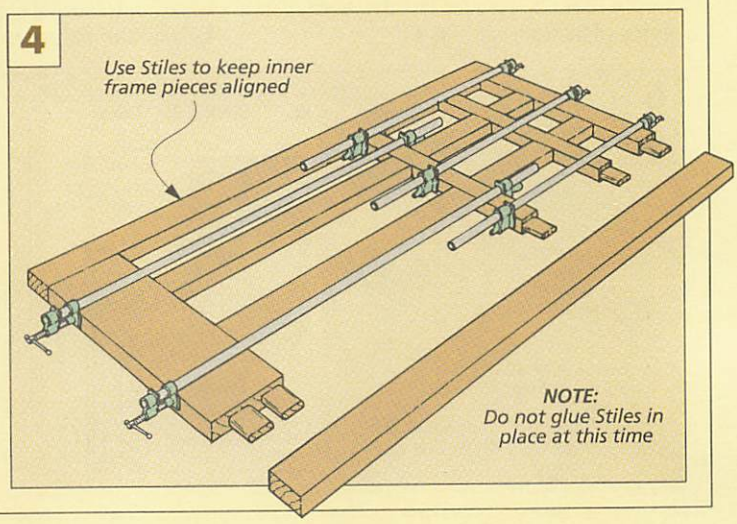

PANEL ASSEMBLY

While the frame is drying, work can begin on the panels. These panels were our biggest design challenge. The trick was to get the joint between each frame and panel tight enough to keep out cold air and moisture. But not too tight — the wood still has to be able to expand and contract.

With frame and panel joinery, the panels sit in grooves in the frame. They "float" in these grooves so the wood can expand and contract with changes in humidity. Unfortunately, as the wood moves, the fit between the panel and the frame can widen or narrow, see near box at right.

PANELS

Instead of a beveled border around each panel, this Entry Door has raised panels with flat borders, see far box at right. This way, the panels can fit tight against the molding and still be tight as the wood expands and contracts.

BACK-TO-BACK. There's another difference. Most raised panels are made from a single piece of wood or a glued-up panel. But we made our panels out of two pieces instead of just one. Let me explain.

Rather than a 1½"-thick panel, two ¾" panels are set back-to-back. This allows the panels to move independent of each other. The outside panel can expand or contract at a different rate than the inside one.

TWO SETS OF PANELS. What you end up making are two sets of identical panels. So instead of eight panels to build, there are sixteen. (There are actually nine panel openings, but I put a piece of glass in the center opening, see box on page 27.)

MAKING THE PANELS. A raised panel with a flat border is simple to make. First, cut the panel blanks to fit the openings in the frame, see Fig. 5. I made mine 1/16" shorter and 1/8" narrower to allow for expansion and contraction, see Fig. 5a.

The next step is to cut the flat border around one side of each panel. To do this, I used a dado blade and cut the border in a series of passes, see Fig. 6.

PANEL SHRINKAGE

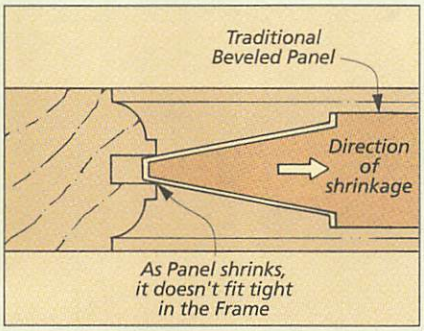

▲ *When a door is first built, a beveled panel may fit tight in the frame. But as the panel shrinks, a gap can develop.*

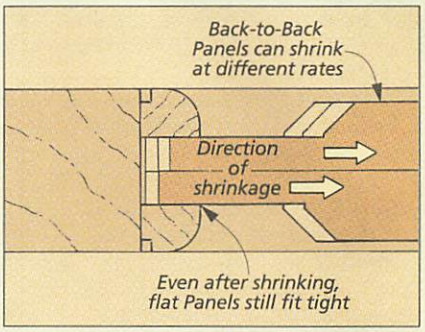

▲ *The panels on this door aren't beveled at all. So no matter how much the panels shrink, the seal will still be tight.*

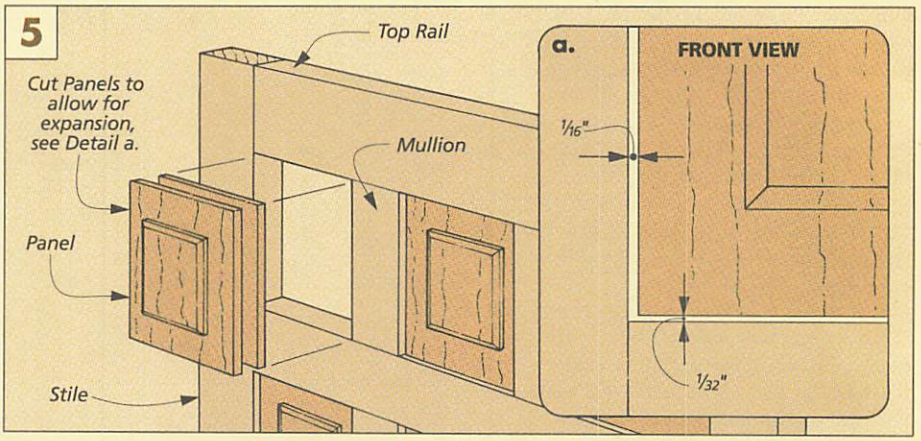

Finally, chamfer the shoulders of the raised field on each panel, see Fig. 7.

MOLDING

To hold the panels in place, I used small strips of molding on each side of the back-to-back panels. But the inside and outside strips are applied differently. The inside is glued and nailed to the frame. But the outside is just nailed.

DRAINAGE SOLUTIONS. If we would have glued both strips, any moisture that seeped behind the strips would have been trapped. This way, water can drain out beneath the outside molding strip.

This is an improvement over panels that are set in grooves. As a panel shrinks, water can seep into the groove. And once it's there, it's trapped.

Our panels were designed to stay tight in the first place. But in case water does get in, we provide a way for it to drain out.

MAKING THE MOLDING. The strips of molding are made in three steps, see Fig. 8a. First, the strips are cut to size. Then a shoulder is routed on one corner. (This shoulder

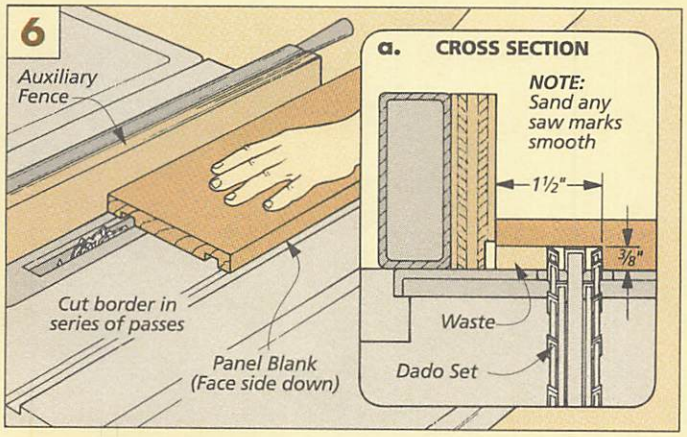

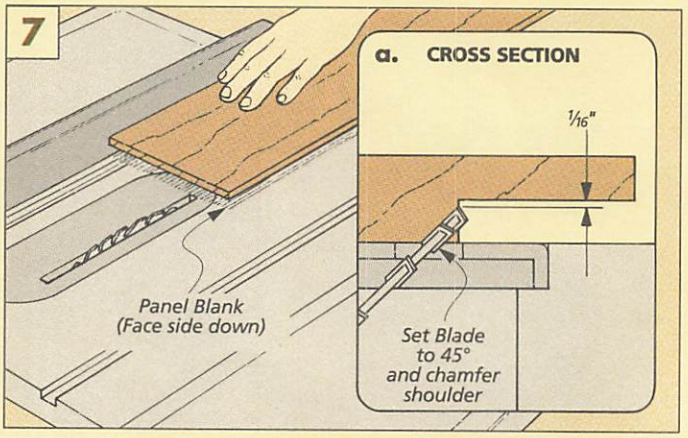

provides a decorative relief to hide the joint line between the frame and the molding strips.) The last step is to round over the other corner.

Safety Note: Since the molding strips are only ½" x ⅝", there's not much wood to hold on to. To keep my fingers safe, I used some special setups when working with the molding strips, see page 14.

Shop Tip: The last thing you want to happen is to come up short on molding. So make plenty of extra. When installing the strips, start with the longest panel opening. If a piece ends up too short, you can use it in a smaller opening later.

INSTALLATION

Now the panels and molding strips are ready to be set in the frame. Each piece is attached a particular way depending on whether it's on the inside or the outside. Start with the inside of the door facing up.

INSIDE MOLDING. The inside molding is installed first. The molding strips are mitered at each end, and getting them to fit tight can be tricky. For tips on mitering thin strips, see page 15.

First I glued and nailed the inside strips in place, see Fig. 8. To do this, I used Franklin's Titebond II. It's not completely waterproof like plastic resin, but it's water resistant and much easier to use. Also to avoid splitting the strips when nailing them in place, it's a good idea to predrill the holes for the brads.

The challenge here is getting the strips flush with the inside face of the frame. My solution was to set them on spacer blocks, see Fig. 8b. (Just be sure you don't glue or nail the strips to the spacer blocks.)

PANELS. Once the inside strips are complete, the panels can be installed, see Fig. 9. I wanted to create a good seal between the inside and outside of the door. But the panels still needed to be able to move.

To create a flexible seal, I used siliconized acrylic caulk. But a bead of caulk needs some room. So I cut a chamfer around the *inside* edge of the *inside* panel, see Fig. 9a. Next, I flipped the door over and ran a bead of caulk along the inside corner of the molding strip, see Fig. 9. Then I set the inside and outside panels in place.

Now, tack each panel in place at the center, see Fig. 9. Do this at the top and bottom only. This keeps the panels centered but still allows them to expand and contract at the sides. (Be sure to predrill the holes.)

OUTSIDE MOLDING. The last step is to nail the outside molding in place, see Fig. 10. These pieces are *not* glued. They're just nailed in place. This way, water can drain out underneath the molding. ❑

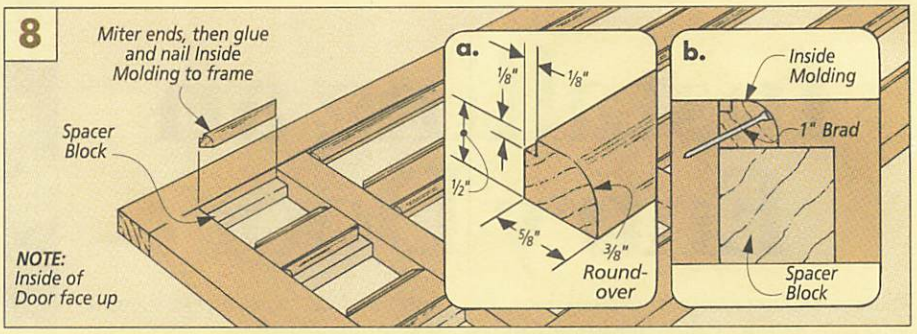

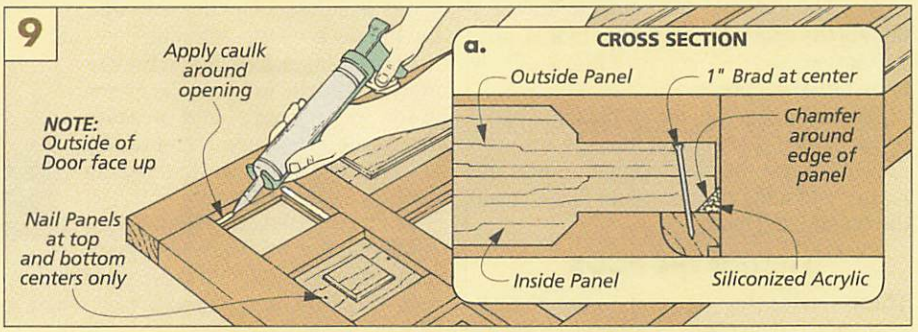

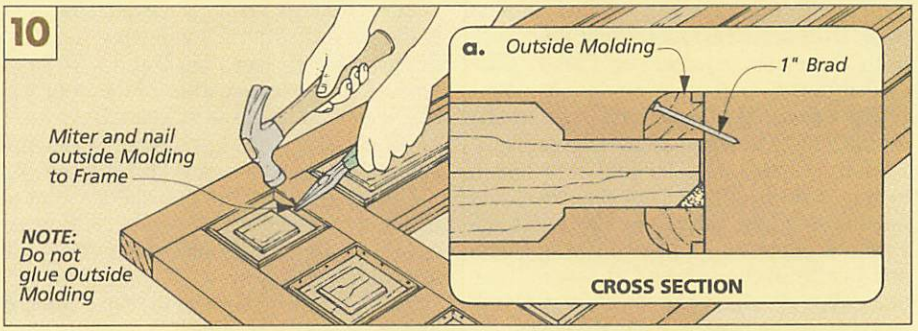

GLASS PANEL

For the glass panel in the door, I used an insulated pane to prevent heat loss. An insulated pane is simply two pieces of glass that sandwich an aluminum channel, see drawing. This type of pane must be special ordered at a local glass store.

Note: Since insulated panes are seldom square and can't be cut, I ordered my pane ⅜" smaller than the opening in the frame. This insures the glass will fit.

The glass pane I ordered was made of safety glass. Instead of breaking into large, jagged pieces, it shatters into small, harmless pieces. (Code restrictions require safety glass for any entry door.)

The glass panel is installed pretty much like the wood panels. There are only a couple differences.

First, the glass needs a little cushioning. And it can't be just nailed in place. So to position the panel, I surrounded it with some small rubber spacers. (I bought them when ordering the glass.)

Also, to create a good seal, I applied the siliconized acrylic caulk to both the inside *and* the outside of the glass, see drawing.

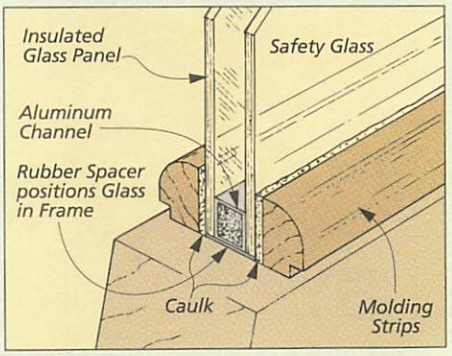

Installing an Entry Door

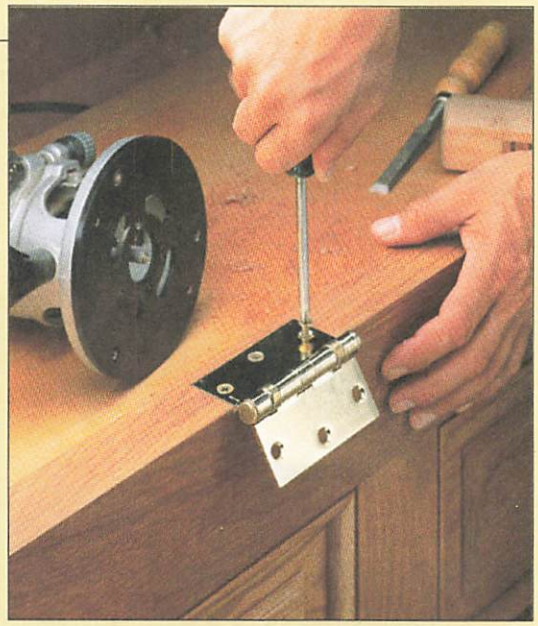

When installing any inset cabinet door, the goal is to end up with a consistent gap between the door and the cabinet. An entry door is the same. But an entry door is quite a bit larger, and the opening it fits in is likely to be out of square.

To make the job more manageable, I break it into three steps. First, I trim the door to fit the opening. Then I mount the hinges and hang the door. And finally, I add the handle and lock.

FITTING THE DOOR

There's more than one way to fit a door to its opening. If an old door is being replaced, then use it as a template, see box on next page. If there isn't a door to copy, then work from the existing jamb, see Fig. 1. (The jamb is the wooden frame around the door.) Either way the goal is to find out *where* the door needs to be trimmed so it fits properly.

READING THE JAMB. To find how much needs to be trimmed from the door, you need to "read the jamb," see Fig. 1. This involves a couple things. Measuring the width and height of the opening at several locations. And checking to see just how plumb and square the jamb really is (or isn't).

SETTING THE GAP. With this information, the door can be cut to fit the jamb. But you don't want an exact fit. On the top, bottom, and handle side, I shoot for about an 1/8" gap. But the side with the hinges is a little different.

I think hinges look best if they're mortised flush. So I hold the leaves of the hinge parallel and measure the gap between them, refer to Fig. 5a. This gap becomes the gap on the hinge side of the door.

CUTTING TO WIDTH. When laying out the final size of the door, I work on the width first. I built the door to the correct width, so there shouldn't be much to trim off (if any).

BEVELING THE EDGE. But even if the door is the perfect width, I'll still cut a bevel on the handle edge, see Figs. 2 and 4. Without a bevel, the *outside* corner of the door will rub against the jamb as it closes. But a 5–7° bevel allows just enough clearance. And the gap at the *inside* corner is still only an 1/8".

Note: If you find the door needs a lot of material trimmed off its width, remove an equal amount from both sides. This will keep the stiles even.

There are several ways to trim a door. A hand plane will trim and bevel the long edge cleanly but requires a sharp blade and some hard work. A circular saw and a straight edge will also work, see Fig. 4. To get a relatively clean cut, use a sharp, thin kerf blade.

TRIMMING THE TOP. When the width has been established, check the top edge. If the jamb isn't square, trim the door just enough so it'll match the jamb. Otherwise, leave it alone. (When crosscutting, score the cut first to reduce chipout.) Remember, the goal is a consistent gap all around the door.

CUTTING TO LENGTH. Now that three of the sides fit the opening, the last step is to crosscut the door to length. I do this at the bottom, where I "built in" an extra 1".

Note: I bevel the bottom edge of the door just like the handle edge, see Fig. 3. A bevel helps the bottom fit tight against the weather-stripping, while keeping the 1/8" gap on the inside face.

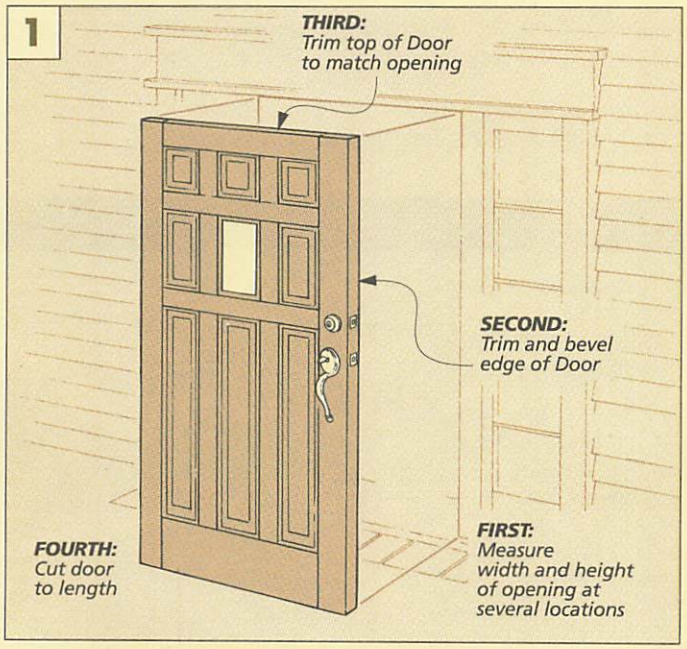

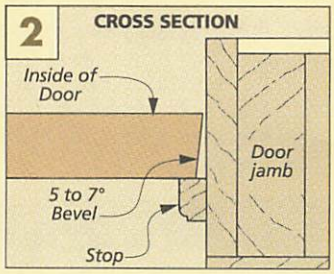

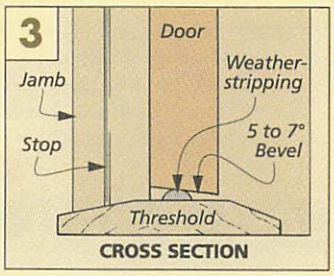

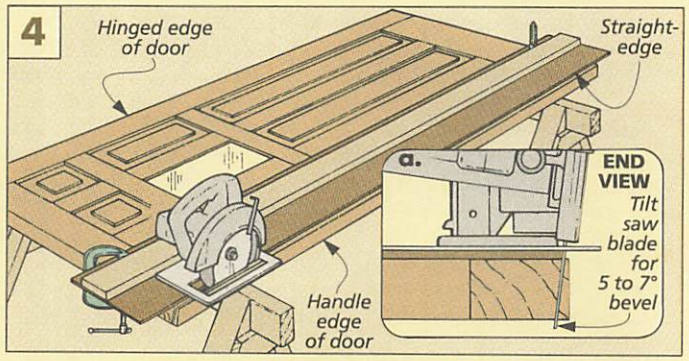

MOUNTING THE HINGES

After the door is trimmed to fit the opening, it's time to add the hinges. I mount them to the door first, then work on the jamb.

Door hinges are located 5–7" from the top and 7–11" from the bottom, see Fig. 5. The middle hinge is centered between them.

To hold a door this heavy, I used 4x4 ball bearing hinges. The ball bearings allow the door to open and close smoothly.

POSITIONING THE HINGES. Set the hinge on the door so the leaf is set back ¼" from the outside face, see Fig. 5a. Trace around the hinge. Then rout out the mortise and square up the corners with a chisel.

To locate the hinges on the jamb, you could just measure them out. But to be safe, set the door in place and shim the top and bottom to create an ⅛" gap, see Fig. 6. Then transfer the position of the mortises to the jamb, and rout and square the mortises.

All that's left is to mount the hinges and hang the door. But it's important to get the holes for the hinges perfectly centered. To do this, I used a Vix bit, see Fig. 7.

ADDING THE HANDLESET

The last step is to mount the handleset. This involves drilling holes for the cylinders and latches. And cutting shallow mortises for the plates. Note: You may need to purchase some special hole saws, see page 31.

Follow the instructions and use the templates that come with the handleset. But don't try to drill the holes for the latch and dead bolt cylinders all the way through the door, see Fig. 8 — at least not in one pass. When the mandrel bit cuts through, stop and finish the hole from the other side. This way you won't tear out either face.

Also, mount the latch and dead bolt first and use them to position the strike plate mortises in the jamb, see Fig. 9. ❑

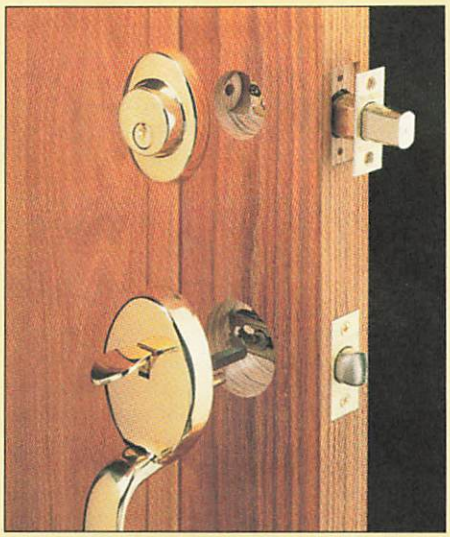

▲ *Our handleset included a handle latch and dead bolt. Installation involved drilling holes and cutting shallow mortises.*

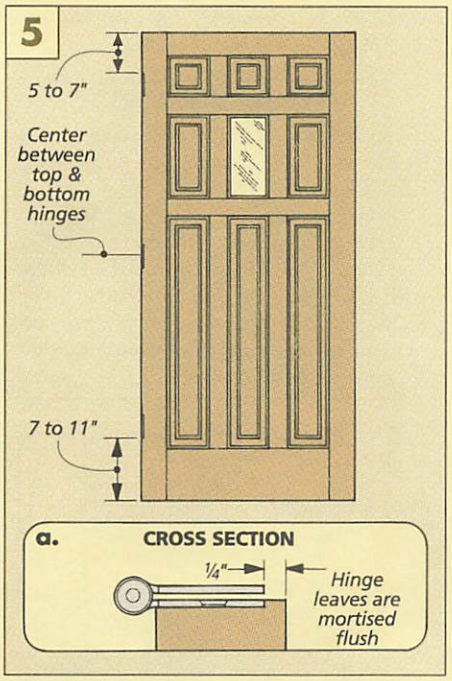

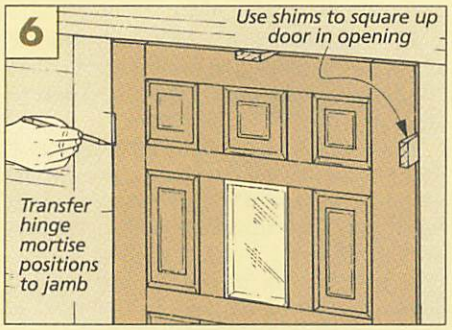

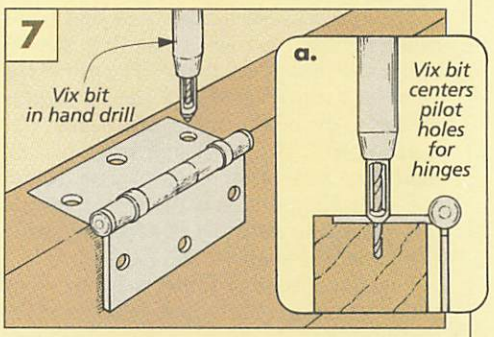

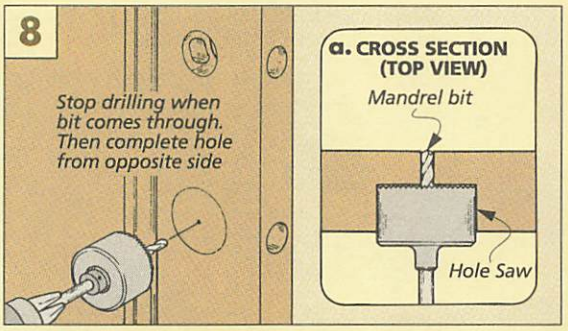

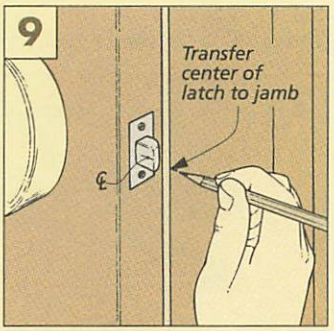

REPLACING AN OLD DOOR

The easiest way to fit a door to its jamb is to use the existing door. The old door serves as a template to mark the new one.

But before you remove the old door, take a good look at how it fits. Is it rubbing against the jamb anywhere? Are the gaps around the door consistent? Write any changes on the door itself, so you'll remember when trimming the new door.

Now set the old door on the new one. Transfer the overall size to the new door, making any adjustments you noted. Also match the bevels on the side and bottom of the door.

You can also use the old door to mark the position of the hinges. But the handle, dead bolt, and latch plates should be marked from the jamb *after* the door is hung.

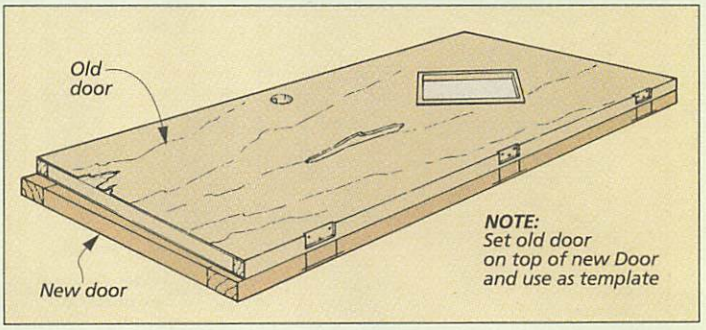

Flush Trim Jig

Here's a jig that you can use to trim plywood edging perfectly flush every time.

A quick way to trim edging flush on plywood is to use a router and a flush trim bit. But it's a problem keeping the router steady as you make your cut. There's not much of a surface for the router to balance on. So if you're not careful, the bit might gouge the wood.

We had a lot of edging that needed to be trimmed flush on our Corner Cabinet (see page 6). That's why we got excited when we received this jig design from **Steven Wood** of Cheshire, Connecticut. It lets you *quickly* trim the edging flush.

The reason I liked Steve's design is because it uses a vertical guide that mounts *under* the router, see photo. The guide stabilizes the router and keeps the bit perpendicular to the edging at the same time.

THE PARTS. The jig design is simple. An **auxiliary base (A)** replaces your router base. Attached to this is the vertical **guide (B)** and **guide support (C)** with a **handle (D)** added for support, see Fig. 1.

I used my existing router base as a template for marking the mounting holes on the auxiliary base. Drill and counterbore these holes a little oversize, see Fig. 1a. This way you can shift the router on the jig if you need to make adjustments later on.

I cut both parts of the guide (B and C) from the same board. But one piece is 1½" shorter than the other. When glued together, it forms a "step" for bit clearance.

Next, I cut the handle from ¾" thick stock and screwed it to the guide support, see Fig. 1b.

ASSEMBLY. When assembling the jig, the important thing is to align the guide with the bearing on the bit. That way the guide stabilizes the router at the same time the bit is trimming the edging flush.

First, align the guide with the bearing as closely as possible and draw a line to mark the location, see Figs. 2 and 2a. Then remove the base from the router.

Because the jig has to be turned over before you can install the screws, use double-sided carpet tape to keep the guide in place, see Fig. 3. Then attach the guide to the base with three #8 x 1" screws, see Fig. 4.

If adjustments to the jig are needed, loosen the mounting screws that hold on the base. Shift the router base in the oversized holes until the flush trim bit cuts the edging flush with the plywood. ❑

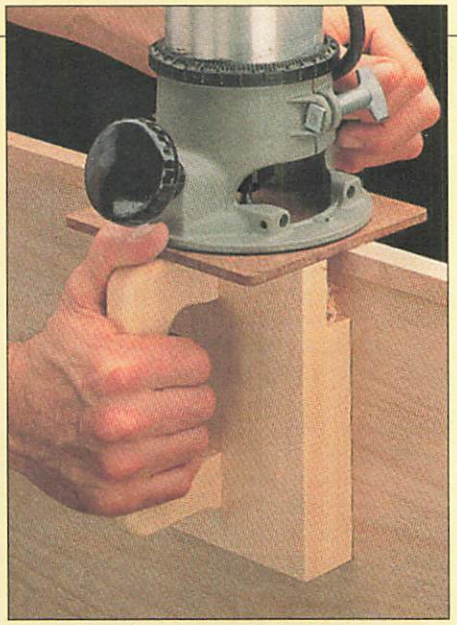

▲ *The handle on the jig holds the router steady while trimming the edging flush along the length of the plywood.*

FEATURE YOUR JIG

If you've built an *original* jig and would like to see it featured on this page, send your idea to *Woodsmith*, Reader's Jig, 2200 Grand Ave., Des Moines, IA 50312.

If we publish it, we'll send you $100 and a full set of *Woodsmith* back issues, with binders. (This set retails for over $300.) Include a sketch (or photo) and explain how it's used. And *please* include a daytime phone number.

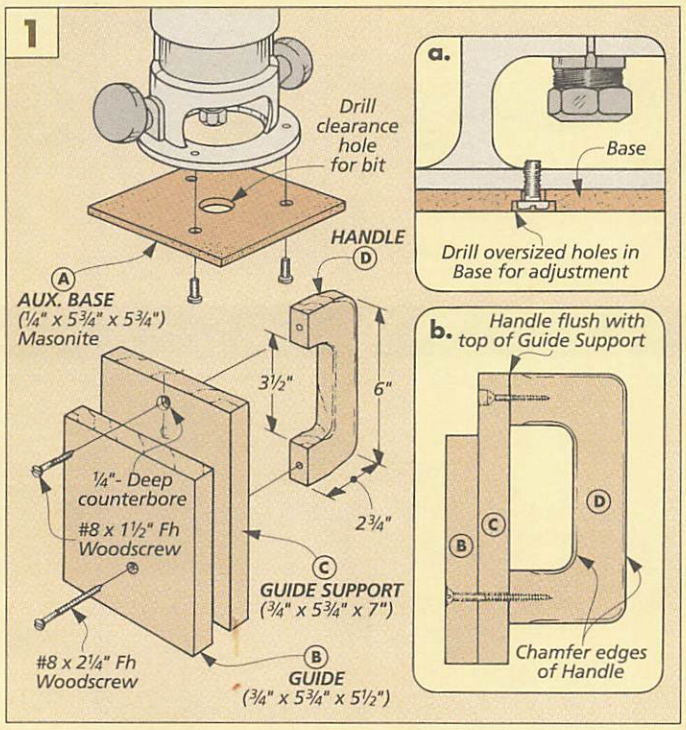

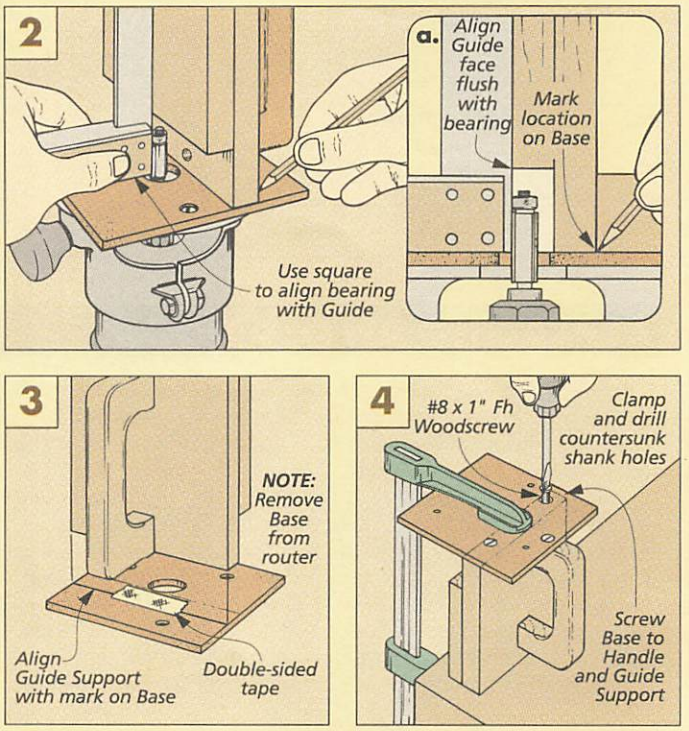

Sources

CORNER CABINET

A complete hardware kit for the Corner Cabinet, shown on page 6, is available from *Woodsmith Project Supplies.* This kit has all the woodscrews you'll need plus the following hardware:

- (3 pr.) 1½" Wraparound Hinges
- (3 pr.) 24"-long Full-extension Drawer Slides
- (4) Magnetic Catches
- (1) Adjustable Leg Leveler
- (1) 1¼"-Dia. Oak Dowel
- (1) ½"-Dia. Oak Dowel
- (1) ¼"-Dia. Oak Dowel
- (1 pr.) Closet Pole Sockets

W94-794-100 Corner Cabinet Hardware Kit..... $89.95

Note: Most of the hardware listed above is also available from the mail order sources below. The adjustable leg leveler and closet pole sockets are available at local home centers and hardware stores.

ROUTER BIT. To shape the edging on the Corner Cabinet, we used a corner beading bit. This router bit isn't as common as other bits, but it is available through the mail order sources listed below.

FINISH. We built two versions of the Corner Cabinet, see page 13. One was left unstained. The other was stained with Minwax's Slate Blue and Winter White Pastel stains, available at local paint and hardware stores.

Both Corner Cabinets were finished with two coats of General Finishes' Royal Finish. This wiping varnish is available from *Woodsmith Project Supplies* and the sources listed below.

W94-4003-602 Royal Finish Top Coat (Satin).... $11.95 quart

LAWN SIGN

To create a pattern for routing the numbers for the Lawn Sign, you can enlarge the numbers with a photocopier to 4"-tall, see page 17. Or you can order full-size patterns available from *Woodsmith Project Supplies.*

W94-800-5252 Lawn Sign Patterns..... $3.50

Note: I also found a clear router base to be helpful when routing the numbers, see sources below.

ENTRY DOOR

To build the Entry Door, shown on page 23, you'll need some special tools and hardware.

TOOLS. To drill the deep mortises, you'll need a long Forstner bit, see sources below. (A brad point bit will also work.) Also, most handlesets will require 1½"-dia. and 2⅛"-dia. hole saws. These are available at local hardware stores.

HARDWARE. To install the Door, we used 4x4 ball-bearing hinges. Our handleset, which includes the handle and dead bolt, was made by Weiser. Both are available at home centers or a local locksmith.

GLASS. If you include a glass panel in your Door, it will need to be safety glass, see page 27. (Our panel was also insulated.) It can be ordered through a local glass store. And while you're there, pick up some rubber blocks for setting the glass in the door frame.

FINISH. There are a number of finishes to apply to an entry door. A door that will be protected by a porch or awning can get by with a water repellent/preservative. This finish looks "natural" and is easy to apply and maintain. We gave our Entry Door two liberal coats of General Finishes' Outdoor Oil, see sources below.

A door exposed to direct sun and rain needs more protection. Here you have to make a decision between paint and spar varnish. Paint lasts longer. Spar varnish looks better, but it also needs to be recoated or refinished more often.

WATERPROOF GLUES

An entry door requires a strong, waterproof glue. On page 20, we talked about a couple different types of glues: plastic resin glue and a new breed of glues made from polyurethane.

Plastic Resin glue, such as DAP's Weldwood Plastic Resin, is inexpensive — about $8 for 1 lb. of powder. And it's commonly available in hardware stores and home centers.

There are two polyurethane glues currently available: Excel and Gorilla Glue. They're a bit more expensive than plastic resin. Excel is $16.95 for 25.4 oz. Gorilla Glue is $19.95 for 18 oz. Both are available through mail order sources, see below.

HINGE BITS

When drilling pilot holes for hinges, it's easy to drill them off-center. This can throw the hinge out of alignment when you screw it in place. While building the Corner Cabinet and Entry Door, I avoided this by using Vix bits to automatically center the pilot holes for the door hinges.

Vix bits are available through quite a few mail order sources, see box below. *Woodsmith Project Supplies* is also offering two sizes of Vix bits. One for Nos. 5 and 6 woodscrews. Another for Nos. 8, 9, and 10 screws.

W94-1505-505 Nos. 5 and 6 Vix Bit..... $8.95

W94-1505-509 Nos. 8, 9, and 10 Vix Bit..... $9.95

WOODSMITH PROJECT SUPPLIES

ORDER BY MAIL

To order by mail, use the order form that comes with the current issue. The order form includes information on sales tax as well as shipping and handling charges.

If the mail order form is not available, please call our Toll Free number at the right for more information on specific charges and any applicable sales tax.

ORDER BY PHONE

For fastest service use our Toll Free order line. Open Monday through Friday, 7 AM to 7 PM Central Time.

Before calling, please have your VISA, MasterCard, or Discover Card ready.

1-800-444-7527

Note: Prices subject to change after October, 1994

MAIL ORDER SOURCES

Similar hardware and supplies may be found in the following catalogs. Please call each company for a catalog or information.

AmBel Corp.
800-779-3935
Excel Glue

Constantine's
800-223-8087
Router Base, Plastic Resin Glue, Vix Bits

General Finishes
800-783-6050
General Finishes

The Gorilla Group
800-966-3458
Gorilla Glue

Trendlines
800-767-9999
Router Base, Vix Bits

Woodcraft
800-225-1153
Router Base, Vix Bits, Long Forstner Bit

Woodhaven
800-344-6657
Router Base, Vix Bits, Corner Beading Bit

The Woodworkers' Store
800-279-4441
Cabinet Hardware, Router Base, Vix Bits, Corner Beading Bit, Plastic Resin Glue, General Finishes

Woodworker's Supply
800-645-9292
Cabinet Hardware, Router Base, Vix Bits

Final Details

Lawn Sign

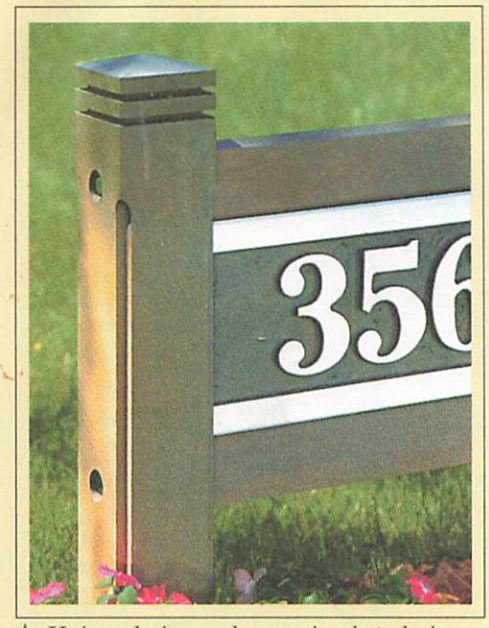

▲ *Unique design and some simple techniques. That's all it takes to turn construction lumber into a distinctive Lawn Sign. See page 16.*

Raised Panel Entry Door

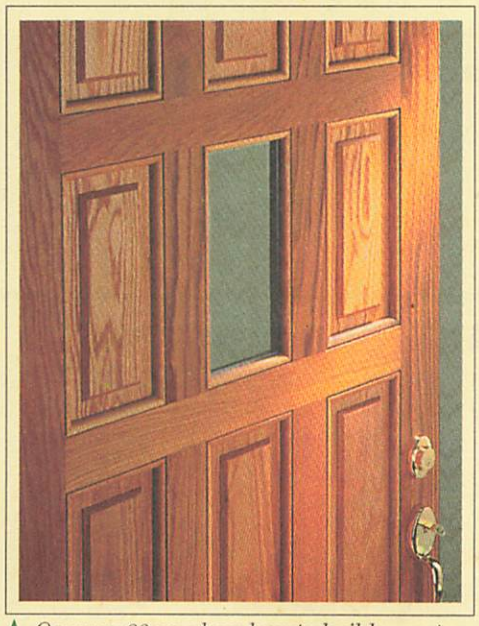

▲ *On page 23 we show how to build a custom door in a home workshop. A few tools and some basic techniques are all that's needed.*

Corner Cabinet

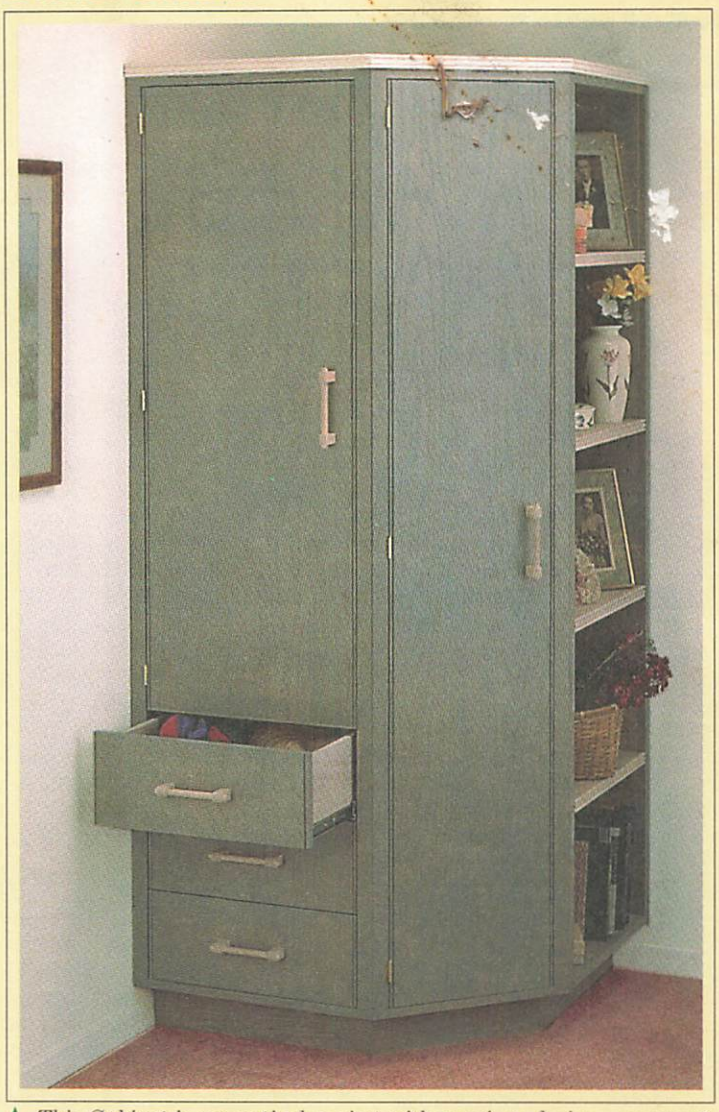

▲ *This Cabinet is a practical project with a unique design, see page 6. Several compartments offer solutions to a variety of storage problems.*

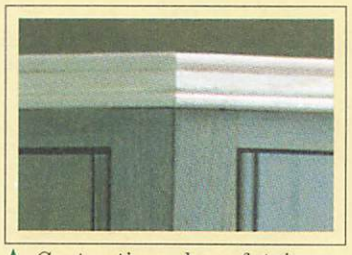

▲ *Contrasting colors of stain create an interesting effect. Without hiding the grain of the wood.*

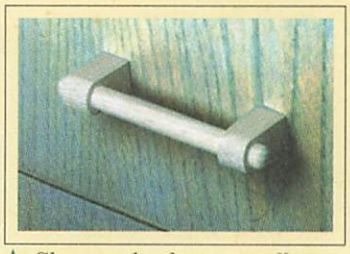

▲ *Shop-made drawer pulls are easy to make, and they're an attractive way to complete the Cabinet.*